ISSUE: 0224

4LIFE
25 year guarantee

SUMMERHOUSE INSTRUCTIONS
BASE KIT 4

Apex summerhouses with a double door & workshop truss for roof structure

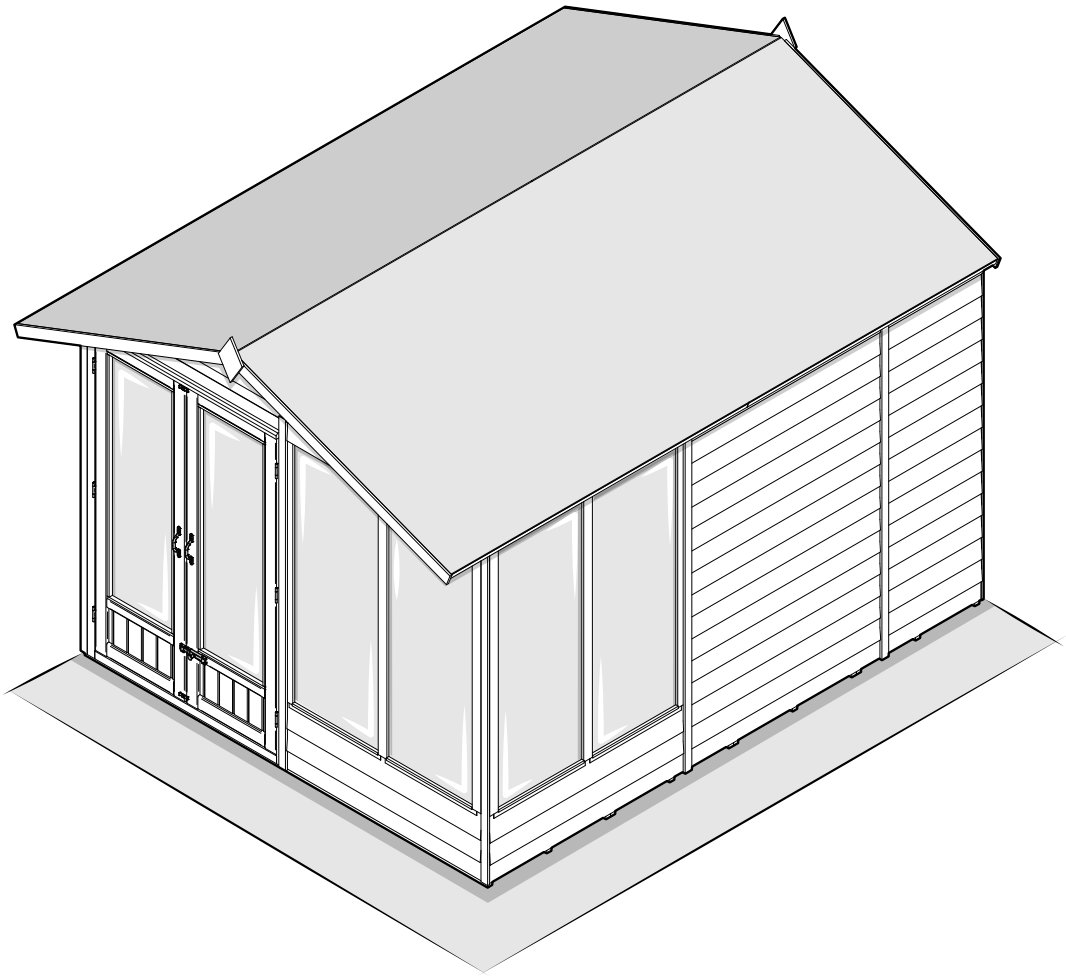

Please note these instructions are generic as the construction for both shiplap and overlap sheds are the same. Any differences will be outlined in the steps.

Missing something or need more information?
Call our aftersales team on
0333 321 3142

Visit our website for spare instructions and more information
www.forestgarden.co.uk

Forest Garden, Oak Drive, Hartlebury Trading Estate, Hartlebury, Worcestershire, DY10 4JB
EU Authorised Representative: Authorised Representative Service, 77 Camden Street Lower Dublin, D02 XE80, Ireland
Tel. +353 1697 2151 E-mail: contact@arenquiries.com

BEFORE YOU START..

Please read through this guide to prepare yourself before assembling your summerhouse. We recommend that you **check all the components and fixings**. Your parts list can be found on your label.

All our summerhouses are constructed in the same way, they simply come with different components depending on the type of summerhouse you have. We have sent you **generic fixing packs** and **generic loose item packs** to suit the summerhouse range. You should expect there to be leftover fixings and loose items.

BASE PREPARATION

It is vital that you build your new summerhouse on a **solid, level base.** Timber or Plastic Shed Bases are ideal, as is solid concrete or concrete slabs.

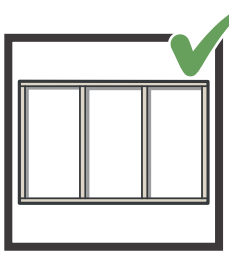

Timber Base
Self-constructed/
Buy pre-made

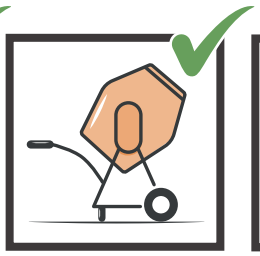

Concrete
Concrete surface/
Concrete slabs

Pro Shed Base
Interlocking
eco-friendly base

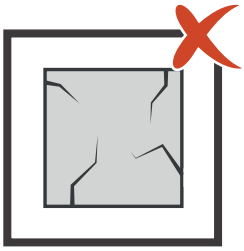

Broken Slabs/Gaps
Uneven slab sizes
with no cement

Loose Soil
A base of soil or
grass only

If you have an existing base and think it is suitable for your new summerhouse to be sited on, it is important you check that it is level and **does not deviate by any more than 15mm** from edge to edge. If this is not the case the building will twist, causing gaps to appear in the sections and the roof, doors, and windows to misalign.

There is more information on base preparation on our website **www.forestgarden.co.uk**

TOOLS REQUIRED

We recommend using the following tools **(not supplied)**:

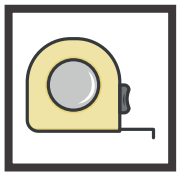

Tape Measure

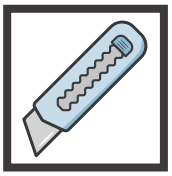

Sharp Knife & Scissors

PZ2 Pozidriv Screwdriver

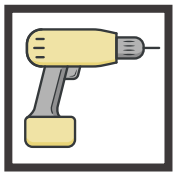

Drill & 2-6mm Drill Bits

Hammer/ Rubber Mallet

Fit For Purpose Ladder

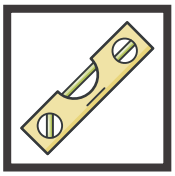

Spirit Level

We recommend getting everything aligned properly before screwing together and that the **screw holes are pre-drilled** at this stage to **avoid splitting the timber.** We do not provide pre-drilled holes due to the nature of expanding and shrinking timber, which can cause pre-drilled holes to misalign.

IMPORTANT
Assembly requires 2+ adults.

REMINDER
Always pre-drill before screwing.

PLEASE KEEP PLASTIC BAGS AND SMALL PARTS AWAY FROM BABIES AND CHILDREN.
TO AVOID DANGER OF SUFFOCATION, PLEASE KEEP THE PROTECTIVE FILM AWAY FROM BABIES AND CHILDREN.
CHECK AND TIGHTEN ALL THE FIXINGS APPLIED TO THIS PRODUCT ON A REGULAR BASIS.

CARE & ATTENTION

To help you get the most out of our products it is useful to know a little more about the properties of timber, what is normal and how your summerhouse may behave as the seasons change. Wood is an extremely durable material for construction but as a natural product when used outdoors it is susceptible to changes in the environment.

THINGS THAT YOU MIGHT SEE IN YOUR PRODUCT

Movement, Twisting & Warping

Wood contains a natural level of moisture so decreasing humidity levels in the surrounding air may cause panels to change their shape as the porous fibres shrink. This can be exaggerated during prolonged periods of dry weather. Movement and gaps in timber products are normal, in most cases the wood will revert to its original form once the high temperatures subside and there is more moisture content in the air. Similarly, in the winter months, the opposite may occur with wood swelling.

Expansion, Contraction, Splits & Cracks

All timber will expand and contract according to its environment. As a result of this expansion and contraction, it is very common to see splits and cracks developing in the wood. Splits are common during the spring and summer months as the wood begins to dry out. The outer surface dries first and contracts, contracting over a still expanded core of the wood. The result of this is that splits and cracks appear along the grain of wood. These splits are not a fault and do not affect the structural integrity of a product.

Mould & Blue Stain

Mould is a surface-dwelling fungus that feeds on the nutrients and debris contained in the surface cells of timber. The most common problems associated with mould are discoloured timber and an increase in permeability of the timber. Blue stain is part of the same family but penetrates deeper into the surface layers of the timber. It stains the timber a dark blue, whereas mould is usually black. These do not cause the timber to rot. Keep the building well ventilated to avoid mould.

Advice On Felt Handling & Usage

Roofing felt is flexible at temperatures above 5°C. In cold temperatures extra care must be taken when handling and installing to prevent cracking and damage to the felt. The felt should not be rolled, folded, or used in temperatures lower than 5° C. In cold temperatures the felt should be stored above 10°C (indoors) for 24 hours prior to use. Felt must be lifted, not dragged, and should be stored on its end on a dry surface.

8 TOP TIPS TO ENSURE YOUR SUMMERHOUSE IS FULLY WATERPROOF

1. **POSITION YOUR SUMMERHOUSE IN THE BEST LOCATION IN YOUR GARDEN**
   Avoid areas where water pools and which are constantly wet. Position away from trees and cut back any overhanging foliage which can cause moisture to be trapped against the walls and debris to collect on the roof.

2. **RAISE YOUR SUMMERHOUSE OFF THE GROUND**
   Ideally, any concrete base should be the same footprint as the summerhouse to allow surface water to run off without pooling. A timber base can also be used. Raise your summerhouse 50mm above ground level.

3. **SEAL THE BEARERS**
   If using a wooden base, we recommend treating it with a treatment containing wax or oil. Also coat the bearers that meet the ground to prevent moisture rising.

4. **USE AN END GRAIN PROTECTOR**
   To protect the corners and panel joins, an end grain protector can be applied.

5. **SEAL THE PANELS & WINDOWS**
   Use a flexible silicone sealant around windows to prevent water ingress. This can also be used where two sections of the summerhouse join together. Apply internally.

6. **CONSIDER ADDING GUTTERS**
   Adding guttering around the fascia of the summerhouse will redirect rainwater away from the summerhouse's foundation.

7. **KEEP VENTILATED**
   Good airflow around the perimeter of the summerhouse and regular ventilation inside the summerhouse will help prevent mould and mildew.

8. **CONSIDER A WATER SEALANT**
   You may want to consider painting your summerhouse with a water sealant at least once a year. This will help reduce the risk of water ingress. We would recommend using 'Bostik Cementone Water Seal' of which can be purchased from multiple DIY stores.

HEALTH & SAFETY

We strongly recommend that PPE (Personal Protective Equipment) is used throughout your build to ensure you are protected from any potential health and safety risks. **Do not exempt yourself from wearing PPE.**

Cut-Resistant Gloves

Protective Glasses

Protective Boots

Protective Mask

Working At Height

THE ROOF OF THIS BUILDING IS NOT A LOAD BEARING STRUCTURE.

The components provided may be heavy. Please lift with caution and with a minimum of 2 people.
Please carefully unpack your summerhouse and loose components as they may have moved during transportation.

TREATMENT INFORMATION

The treatment applied to your summerhouse is to ensure longevity and protection against fungal decay and rot. This may leave colour variations, but these will even out as the moisture content stabilises.

Pressure Treatment
Pressure treatment is to provide protection against rot
Pressure treated summerhouses do not need to be re-treated every year
25 year guarantee

Use the 'waterproofing top tips' to increase the longevity of your summerhouse.
See our website for more information at **www.forestgarden.co.uk /guide-to-our-products/**

Treated timber contains biocidal products for control of wood destroying organisms.
Active Ingredients - Basic Copper Carbonate, DDA Carbonate, DDA Chloride.

- Wear gloves when handling.
- Avoid inhalation of sawdust.
- Do not use in contact with drinking water or food.
- Do not use for animal bedding or in fish ponds.
- Dispose of treated wood responsibly.
- Treated products cannot be recycled as the wood is no longer in its original virgin state.
- Once the treatment has dried there is no risk of toxic contamination. The risk would come from the treatment before it is added to our products.

DISCLAIMER

Check you have all your parts prior to assembly.

Timber is a natural material of which will shrink and swell because of varying moisture content.

Assembly of damaged parts may be deemed to be acceptance, and this may affect the remedies you are entitled to.

If the product is not constructed in accordance with the instructions, or is altered in anyway (e.g. painted), the manufacturer cannot be held liable for any resulting damage.

If you are organising a third party to install your summerhouse, it is best not to schedule this immediately on receipt of your order, to give you time to check your delivery.

IDENTIFY YOUR CHOSEN SUMMERHOUSE

From the **floor plans** below, identify your summerhouse based on the **width, depth** and **roof type** provided. You will need this to identify the side panel positions before assembling your summerhouse. **Use the key as a guide.**

KEY

- **A** – **2ft Panel (590 x 1831mm)** **(With & without windows)**
- **B** – **3ft Panel (885 x 1831mm)** **(With & without windows)**
- **C** – **4ft Panel (1180 x 1831mm)** **(With & without windows)**
- **D** – **4ft Door Panel (1180 x 1831mm)**

PLEASE NOTE
Same size panels are interchangeable.

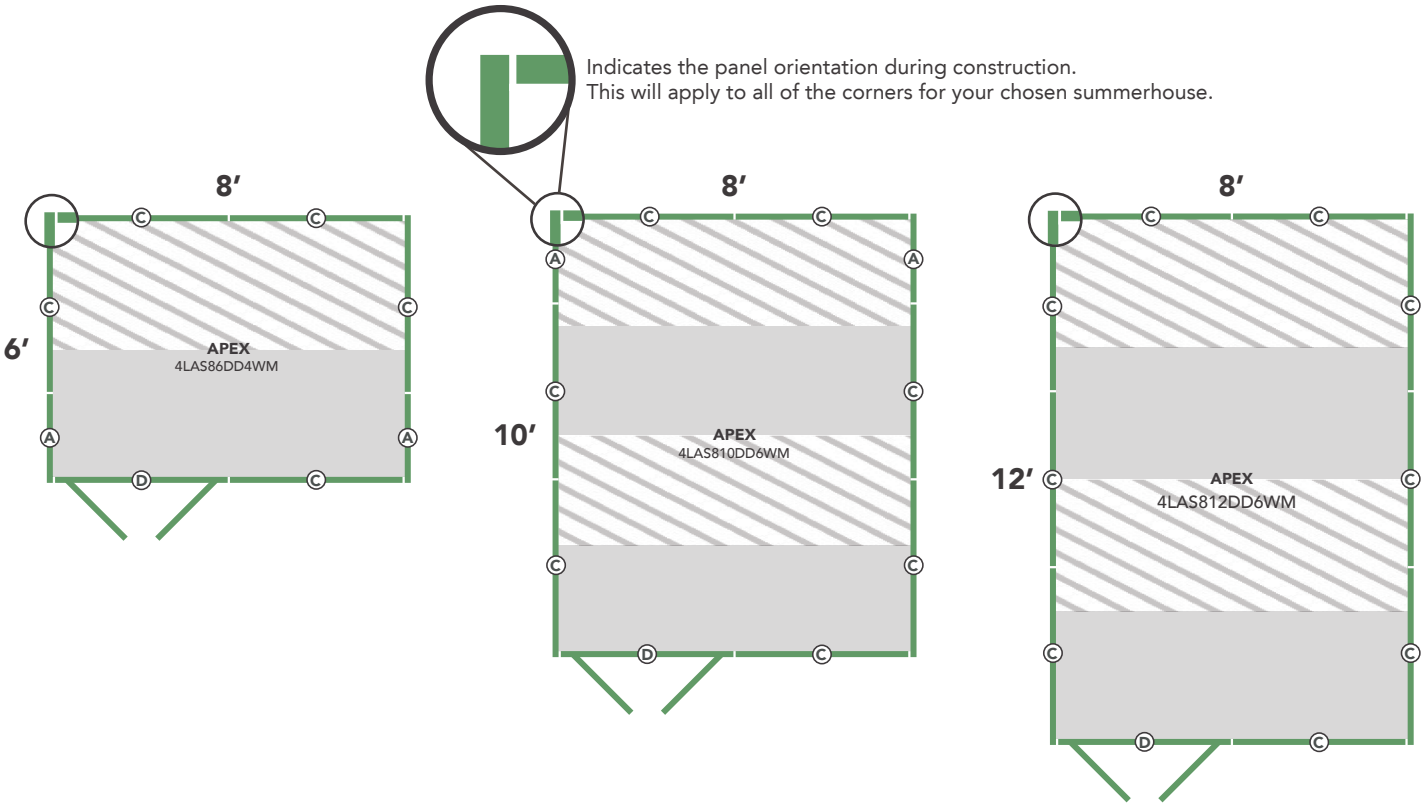

FIXING PACKS

We have provided **several fixing packs** for your build. Each fixing pack will contain fixings for each step of the assembly.

These fixing packs are generic, to suit the modular summerhouse range. Visuals in each of the **steps are for reference only** and may slightly vary depending on the summerhouse you have chosen. Any major differences will be outlined in the steps. We have designed them to be as simple as possible to follow, but **if you have any issues, please contact our aftersales team. Check your parts list prior to assembly,** of which can be found on your summerhouse label.

FLOOR ASSEMBLY

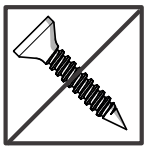

THERE ARE NO FIXINGS FOR THIS SECTION.
Look through the different visuals and follow the step that suits your chosen summerhouse.

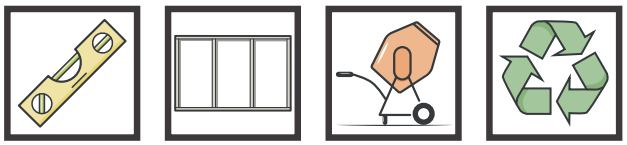

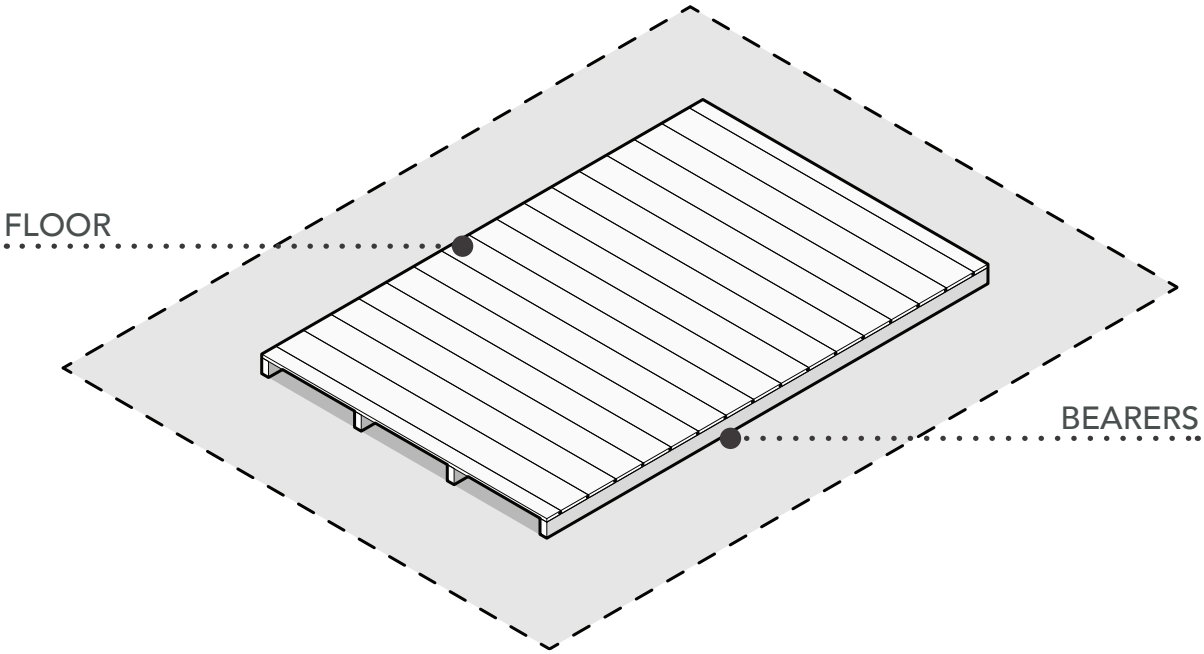

STEP 1: POSITION FLOOR(S)

Due to the health and safety concerns of the Floor weights, we **do not** advise to secure the floors together. If you wish to secure the floors together, you do so at your own risk.

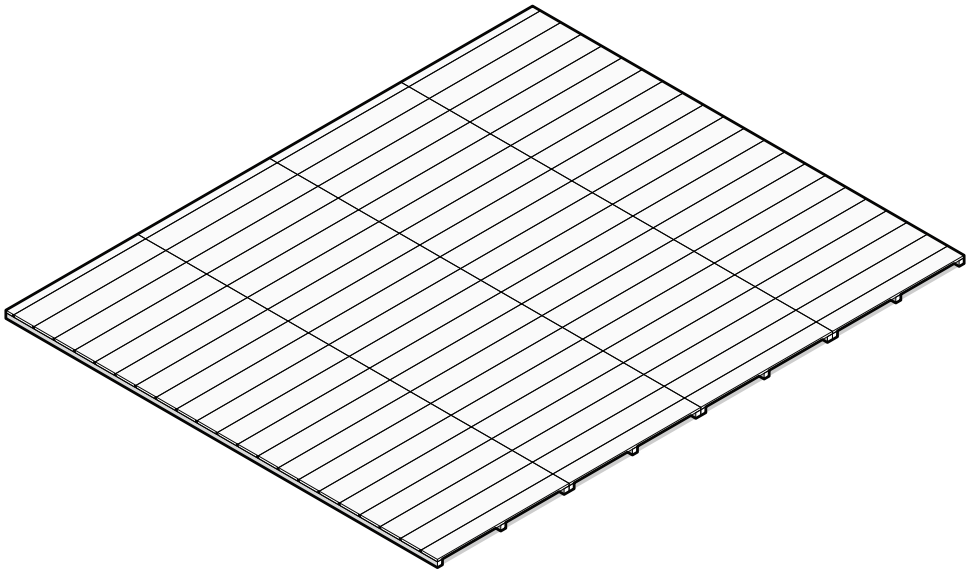

MULTIPLE FLOORS

Position the Floors in your desired location. **Butt the Floor bearers together** and ensure they are flush on each side. The **bearers** will be butted together **along their side face** as shown above.

SIDE PANEL ASSEMBLY

FIXING PACK CONTAINS:

FIXING PACK CODE: *SUMPANELSFP*

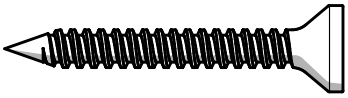

5 x **60mm** Screws
QTY: **3**

4 x **50mm** Screws
QTY: **64**

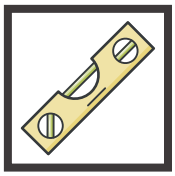

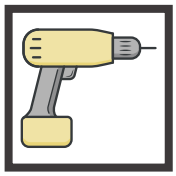

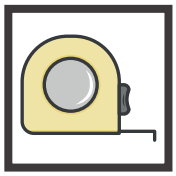

STEP 1: SIDE PANEL ASSEMBLY

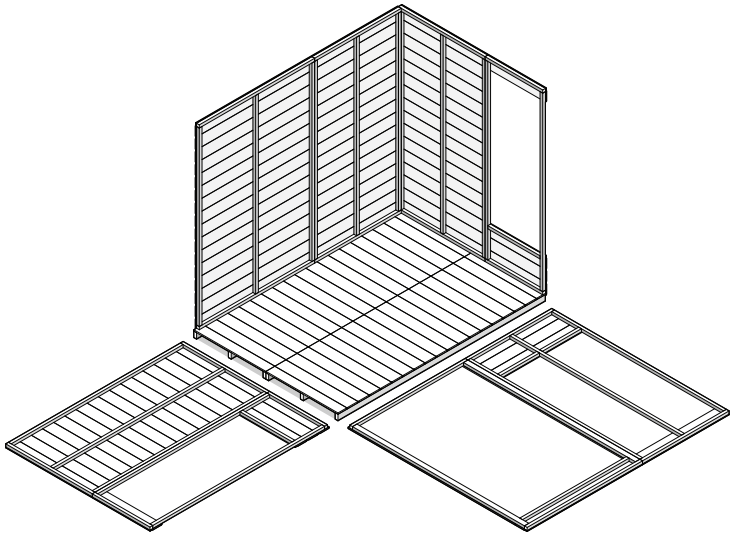

LAY OUT YOUR PANELS

Lay out the panels around your summerhouse Floor(s) to your desired panel configuration. Use your **floor plan** to confirm panel positions.

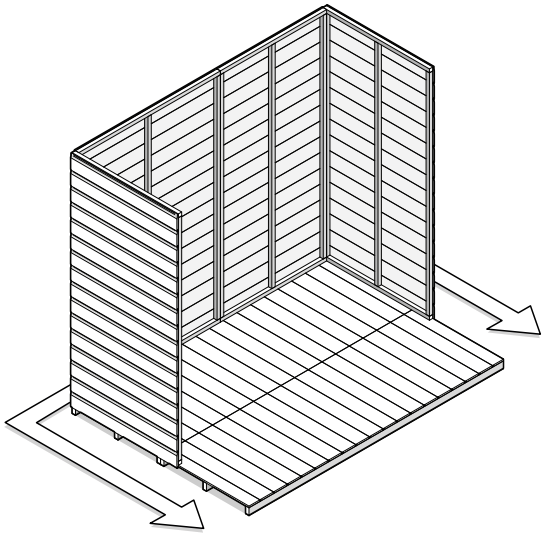

WORK FROM BACK TO FRONT

We recommend starting in a back corner and then **work from the back panels to the front panels for assembly.**

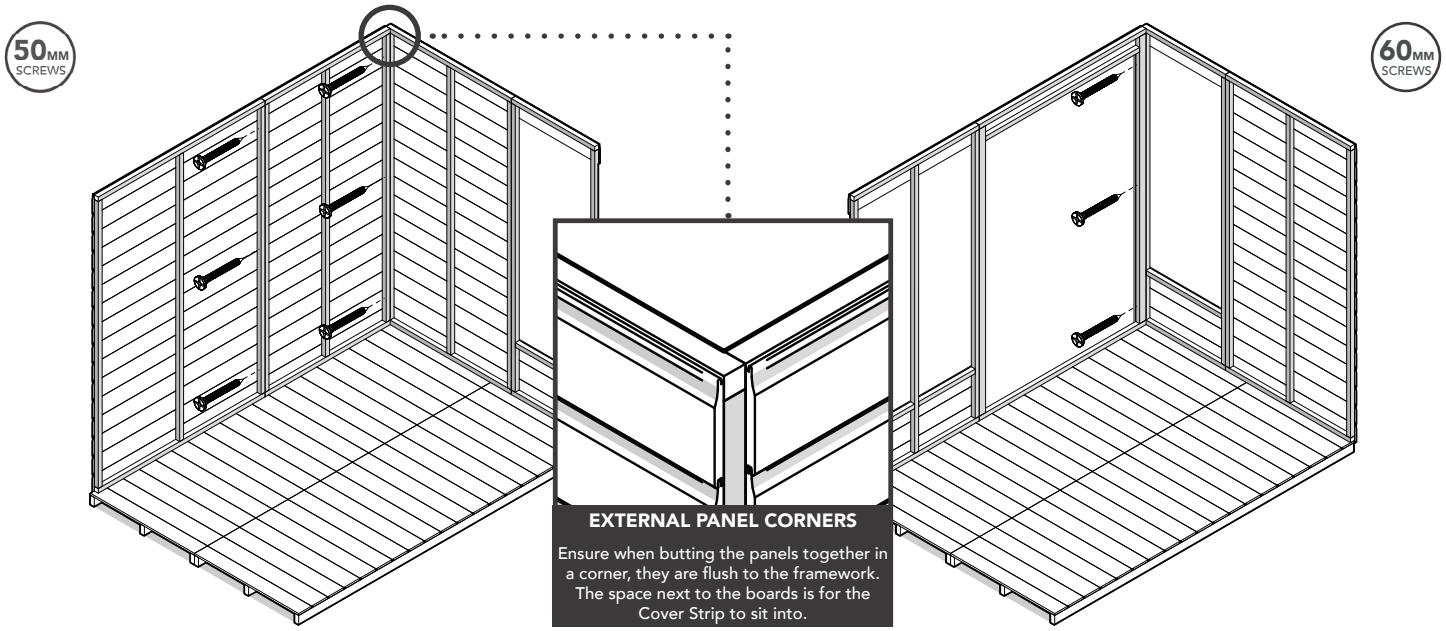

SECURE PANELS TOGETHER

Position and secure the Side Panels together. Ensure the bottom batten on the Side Panels sit on the Floor and the bottom board is up against the Floor edge.

SECURING THE DOUBLE DOOR PANEL

For securing the Double Door Panel to a corner, use the 60mm screws as shown above. Use 50mm screws for securing all of the other panels together.

STEP 2: SECURE SIDE PANELS TO FLOOR(S)

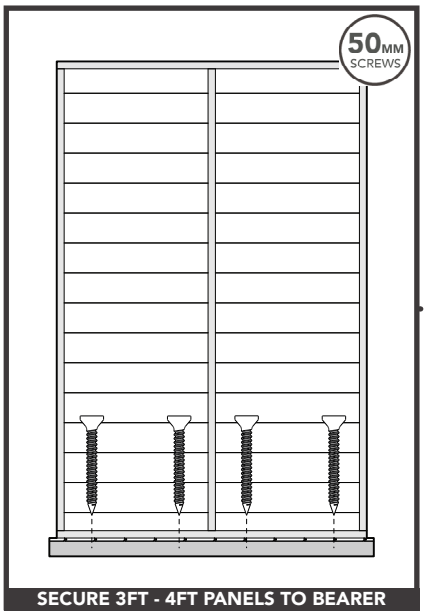

SECURE 3FT - 4FT PANELS TO BEARER

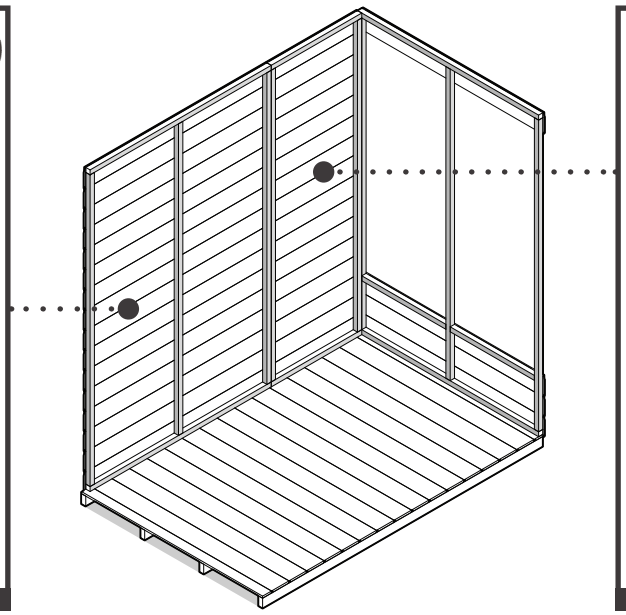

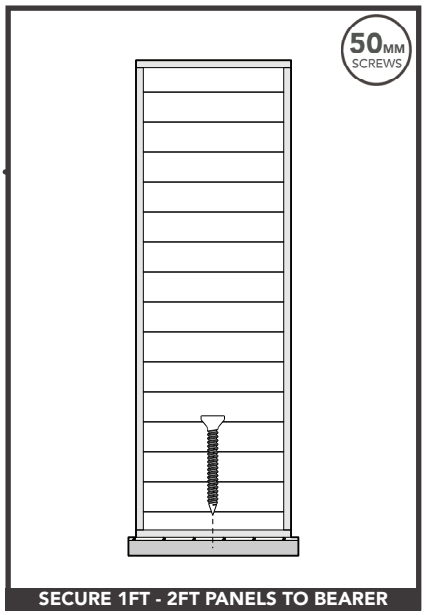

SECURE 1FT - 2FT PANELS TO BEARER

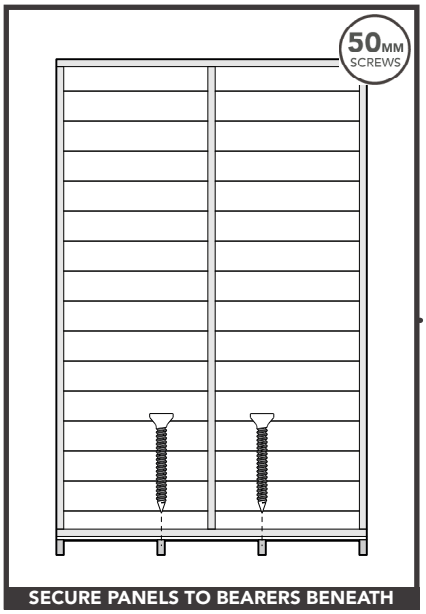

SECURE PANELS TO BEARERS BENEATH

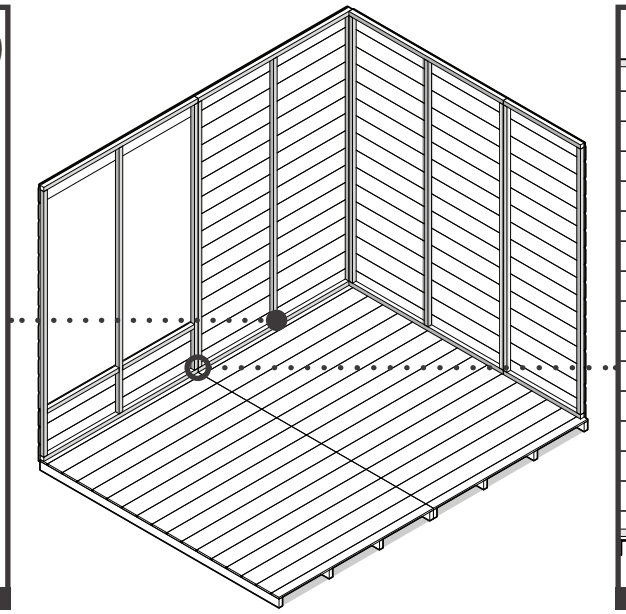

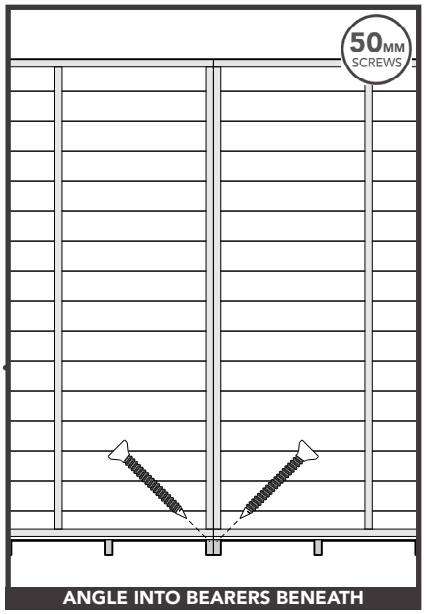

ANGLE INTO BEARERS BENEATH

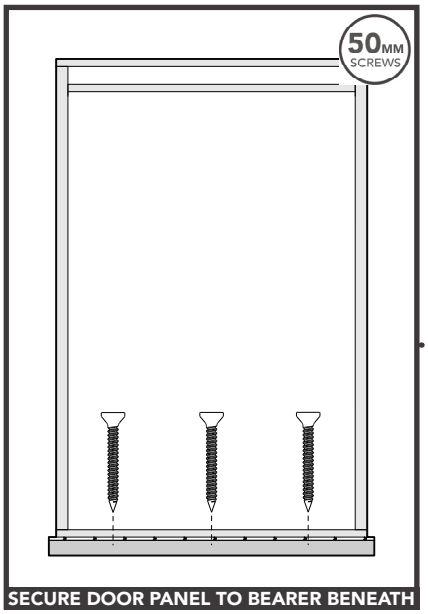

SECURE DOOR PANEL TO BEARER BENEATH

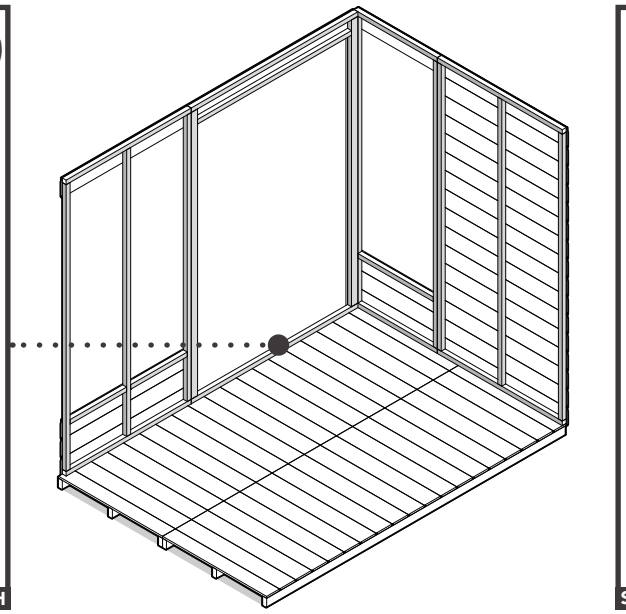

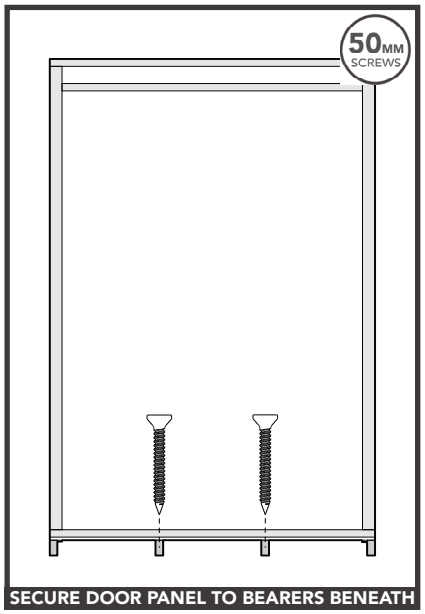

SECURE DOOR PANEL TO BEARERS BENEATH

SECURE TO FLOOR BEARERS BENEATH

Secure the Side Panels and Door Panel to the Floor(s) by **screwing into the floor bearers beneath.**

APEX SECTION ASSEMBLY

FIXING PACK CONTAINS:

FIXING PACK CODE: *SUMGABLEFP*

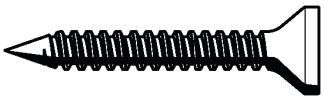

4 x **50mm** Screws
QTY: **8**

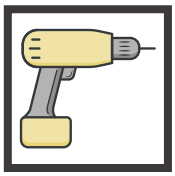

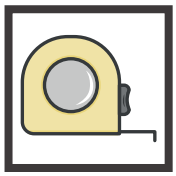

STEP 1: APEX SECTION ASSEMBLY

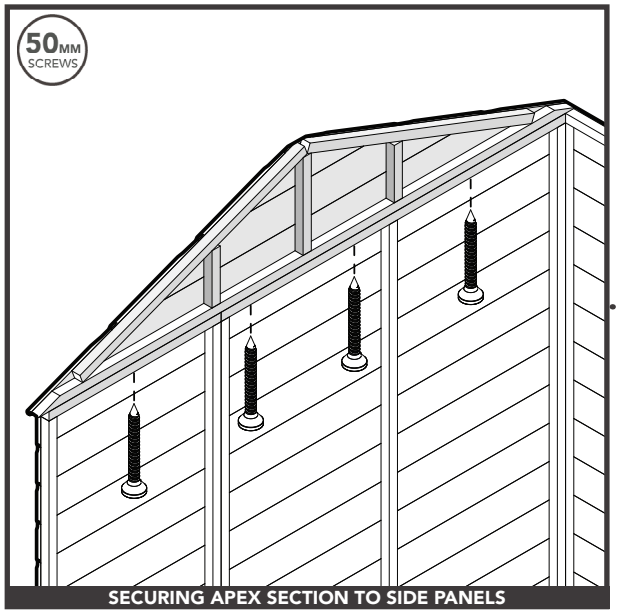

SECURING APEX SECTION TO SIDE PANELS

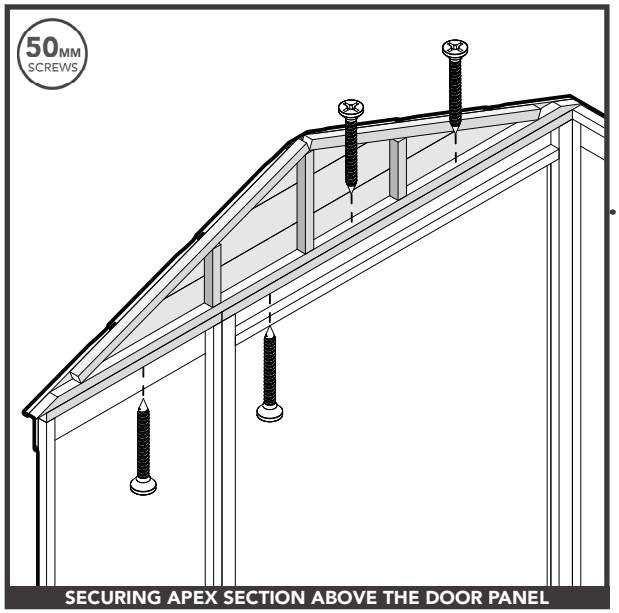

SECURING APEX SECTION ABOVE THE DOOR PANEL

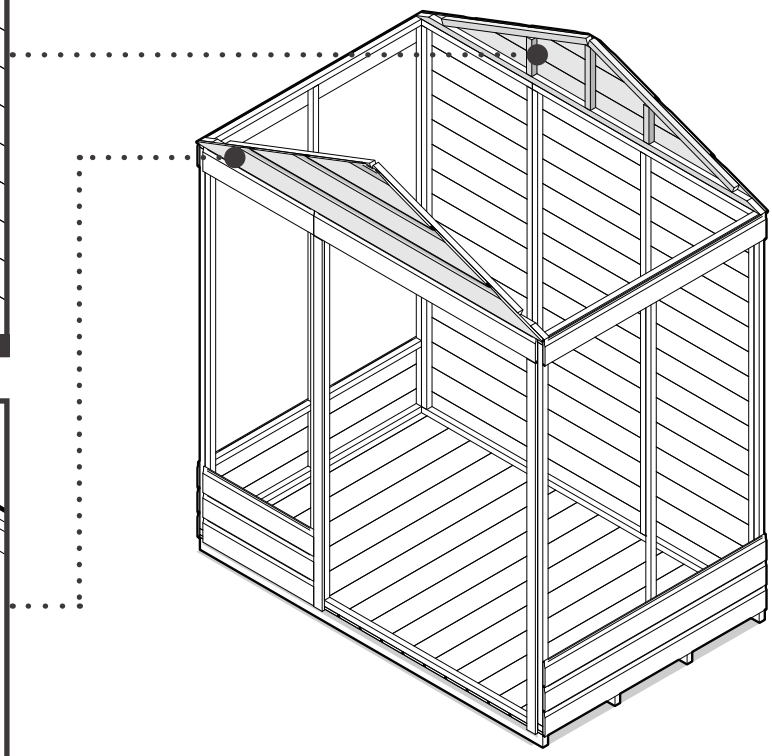

APEX SECTIONS

Position and secure the Apex Sections to the Side Panels as shown above.
For an apex summerhouse, secure the Apex Sections to the front and back of your summerhouse.

WINDOW ASSEMBLY

FIXING PACK CONTAINS:

FIXING PACK CODE: *SUMWINFP*

You may receive more than the required fixings and should expect some leftover fixings after your window assembly.

3.5 x **30mm** Screws
QTY: **36**

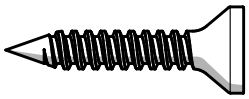

3.5 x **25mm** Screws
QTY: **48**

1.6 x **25mm** Panel Pin
QTY: **18**

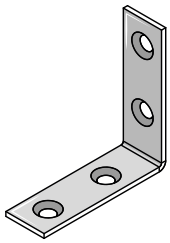

L-Brackets (50mm)
QTY: **12**

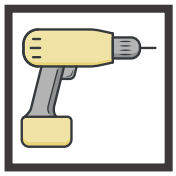

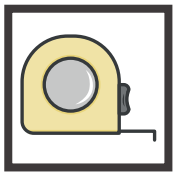

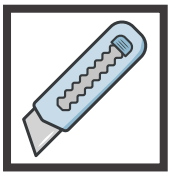

STEP 1: WINDOW SILL ASSEMBLY

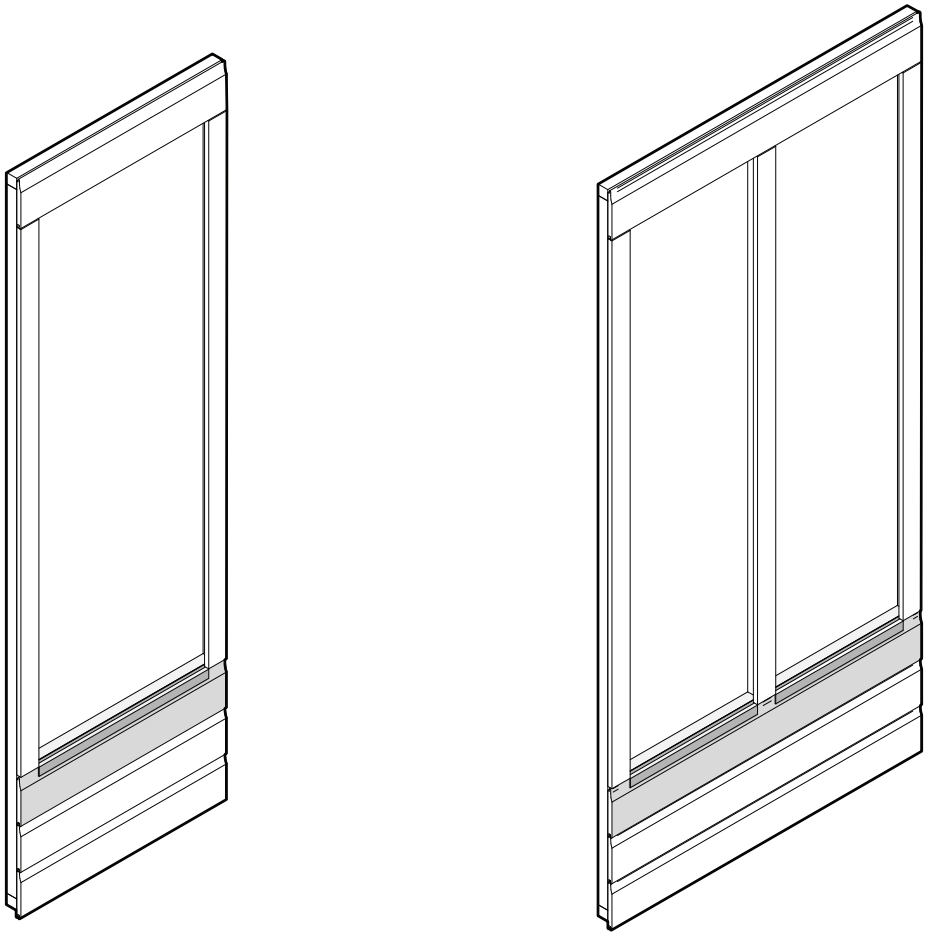

TRIM & POSITION YOUR Z-STRIPS

Place the Z-Strip on top of the board in the window opening. **Mark out and trim the Z-Strip to the required size.**
Ensure the Z-Strip sits into the window opening as shown above.

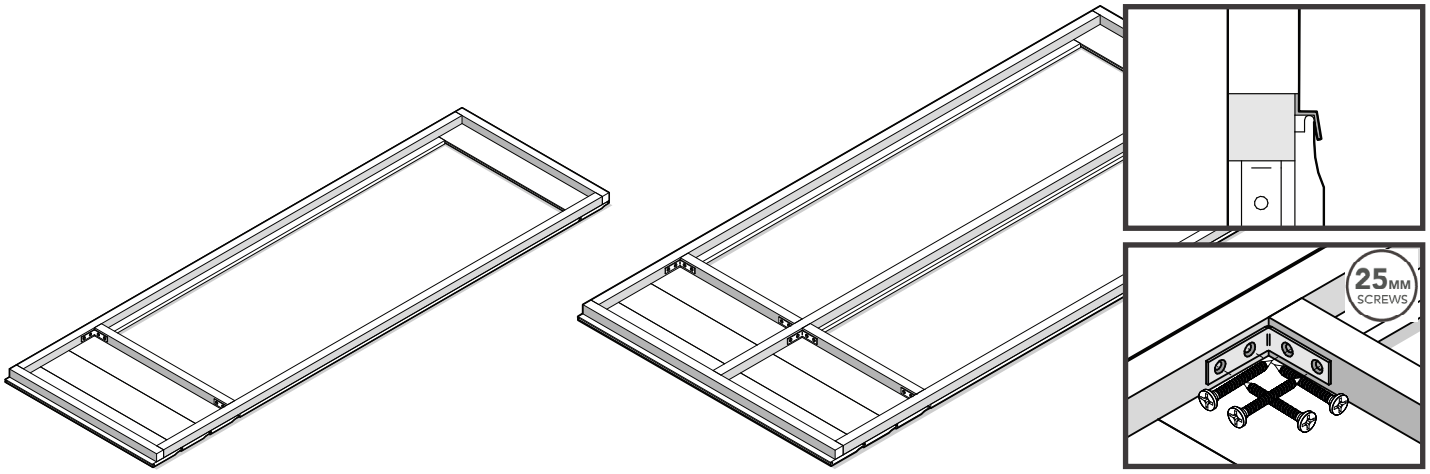

WINDOW SILLS

Using the positioned Z-Strips, position the Window Sills flush to the top of the Z-Strips. **Secure the Window Sills using the L-Brackets to the Window Panel framework. Use 2 x L-Brackets per Window Sill.**

2ft Window panel window sill size (28x28x534mm), 3ft Window panel window sill size (28x28x400mm), 4ft Window panel window sill size (28x28x548mm)

STEP 2: WINDOW ASSEMBLY

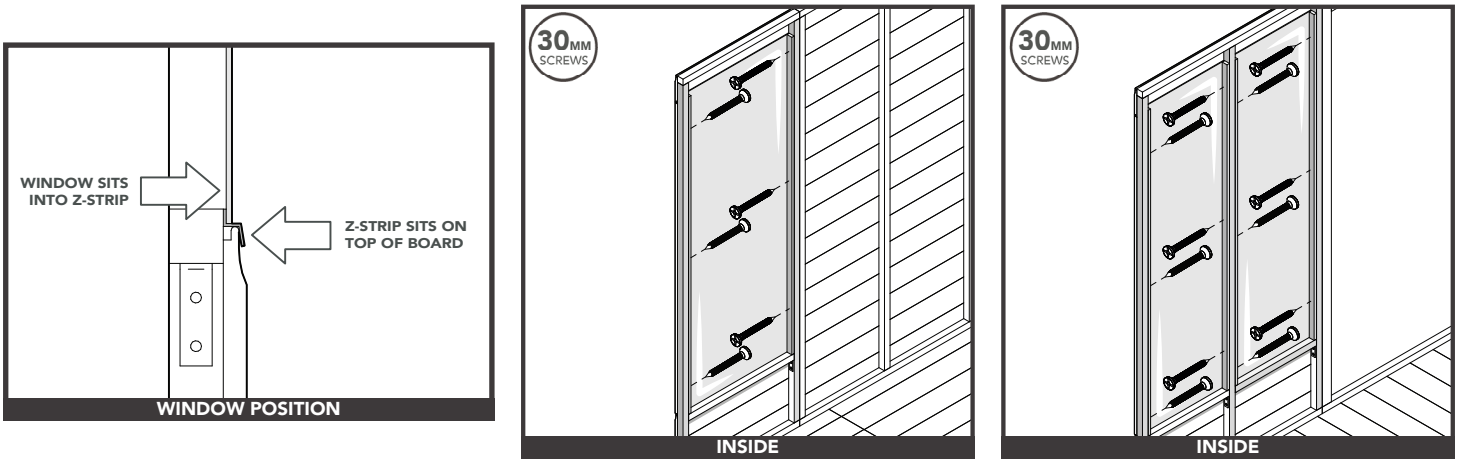

WINDOWS & INTERIOR WINDOW STRIPS

Position the Window onto the Z-Strip from the outside of your summerhouse. The **Window will be placed up against the top board and side strips** on the inside of your Window Panel. Peel your protective film off the Window. **Position and secure the Interior Window Strips** once the Window is positioned in place. Repeat the process for the other Windows.

Interior window strip size (24x12x600mm)

STEP 3: WINDOW BEADING

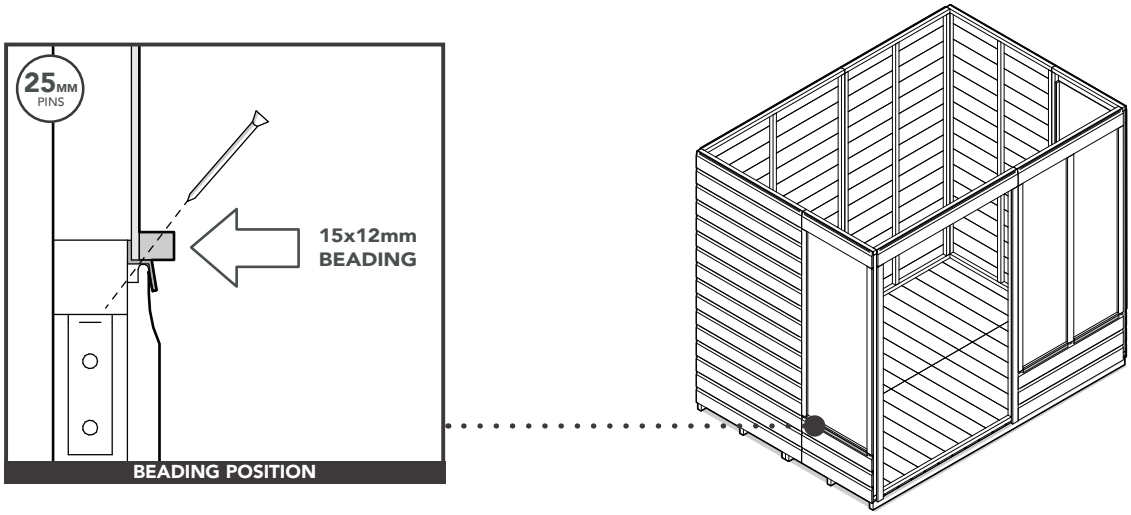

SECURE THE WINDOW BEADING

Position the **15x12mm Beading** onto the Z-Strip and up against the Window. Secure in place with **3 x pins** per window. **Be careful not to hit the Window when pinning the Beading into place.** Preferably use a rubber mallet for this step.

COVER & DOOR STRIPS

FIXING PACK CONTAINS:

FIXING PACK CODE: *SUMSTRIPSFP*

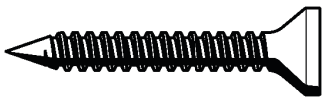

4 x **50mm** Screws
QTY: **3**

3.5 x **30mm** Screws
QTY: **46**

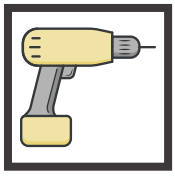

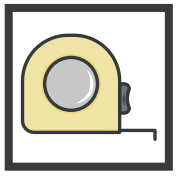

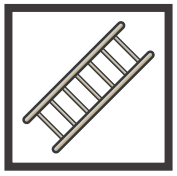

STEP 1: COVER STRIPS

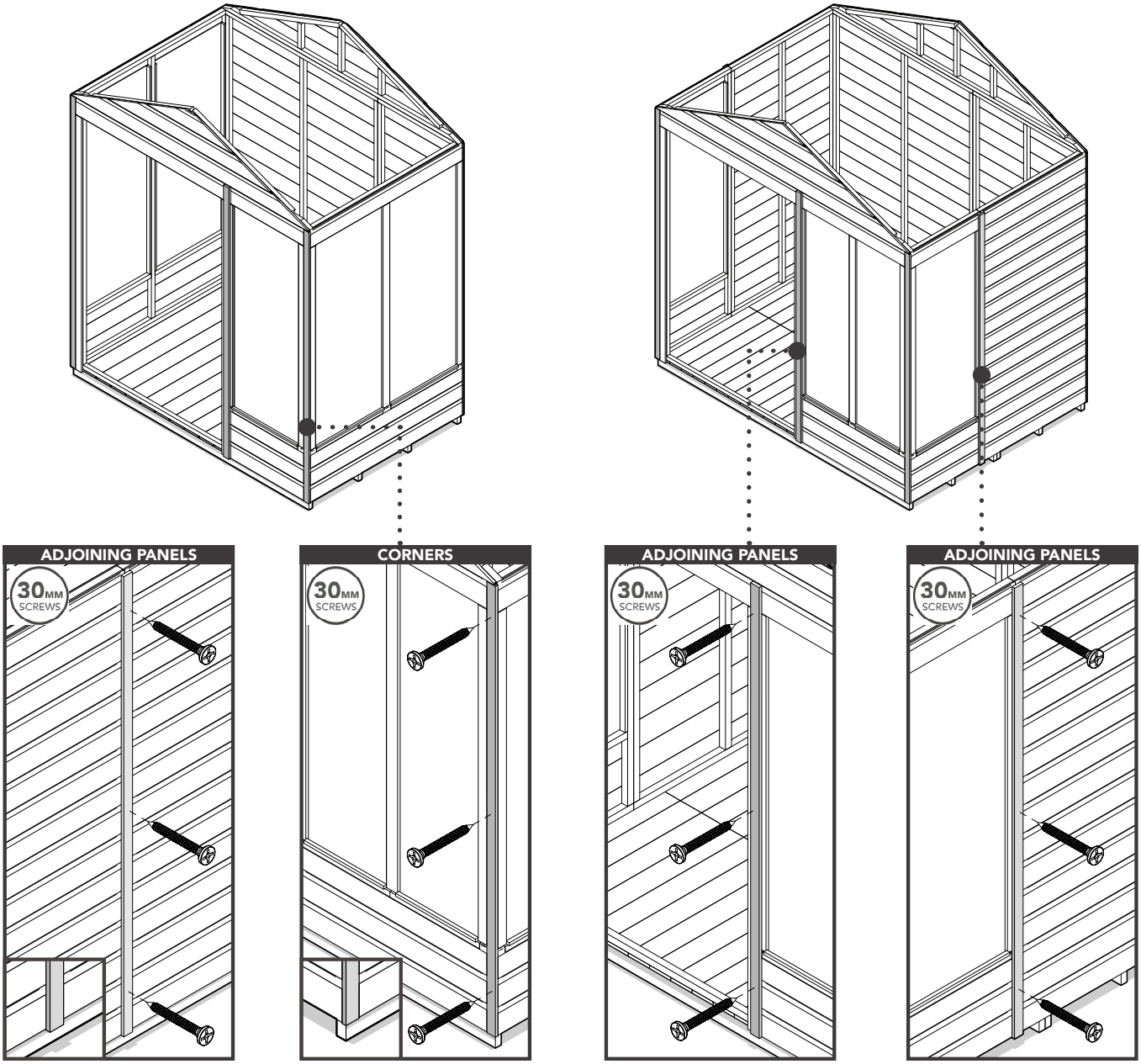

COVER STRIPS

Secure the Cover Strips to the corners and adjoining panels. Ensure they are flush to the bottom edge of the panels. Make sure to **secure the Cover Strips to the framework behind and not into the joins of the panels.**

Cover strips size (1823mm)

STEP 2: INTERNAL DOOR STRIPS

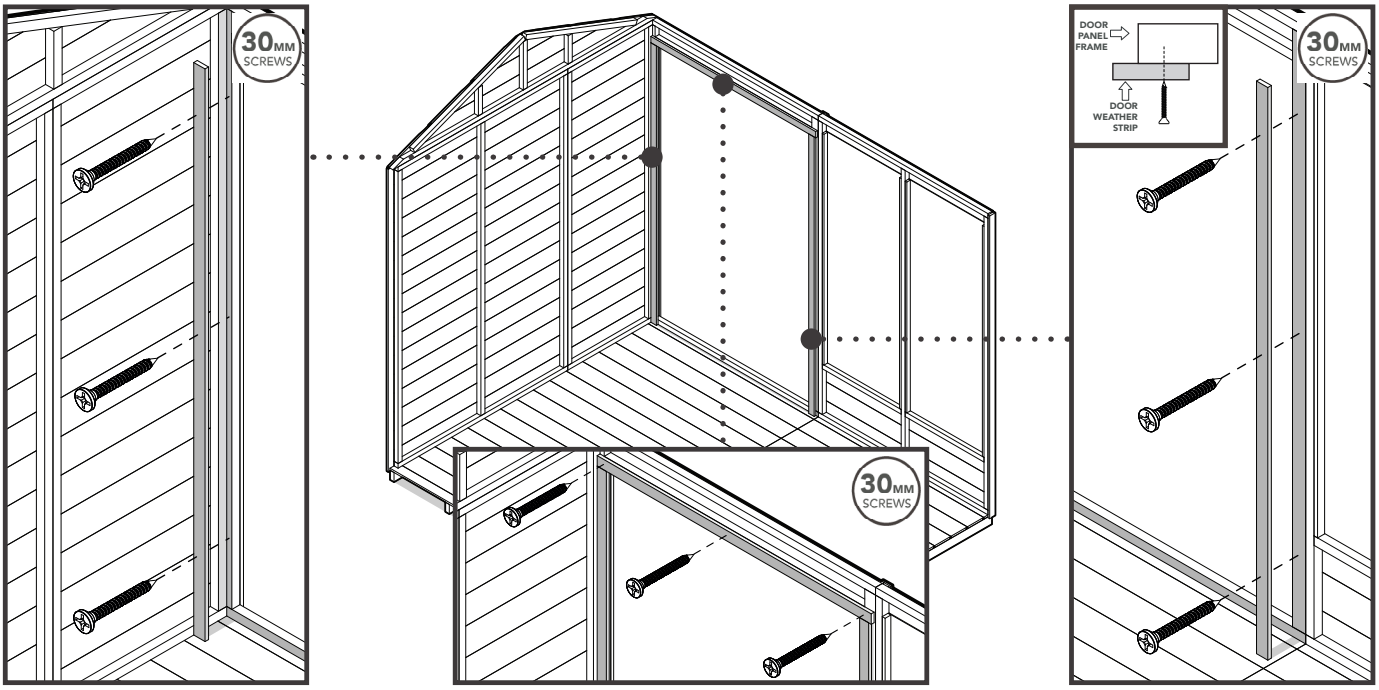

DOOR WEATHER STRIPS

Secure the Door Weather Strips to the Door Panels framework, and ensure they are flush to the Floor and against the face of the Door Panel framework. Ensure there is approximately a 10mm overhang into the door opening. If due to the panel configuration, your Door Panel framework is partly hidden, secure the Door Weather Strip to the visible framework as shown above.

Door weather strip size (38x12x1683mm)

TOP WEATHER STRIP

Position and secure the Top Weather Strip above the Door Weather Strips. Ensure it is flush to the Door Weather strips. If due to the panel configuration, your Door Panel framework is partly hidden, the Top Weather Strip will slightly overhang the 1 x Door Weather Strip as shown above.

Top weather strip size (38x12x1146mm)

STEP 3: EXTERNAL DOOR STRIPS

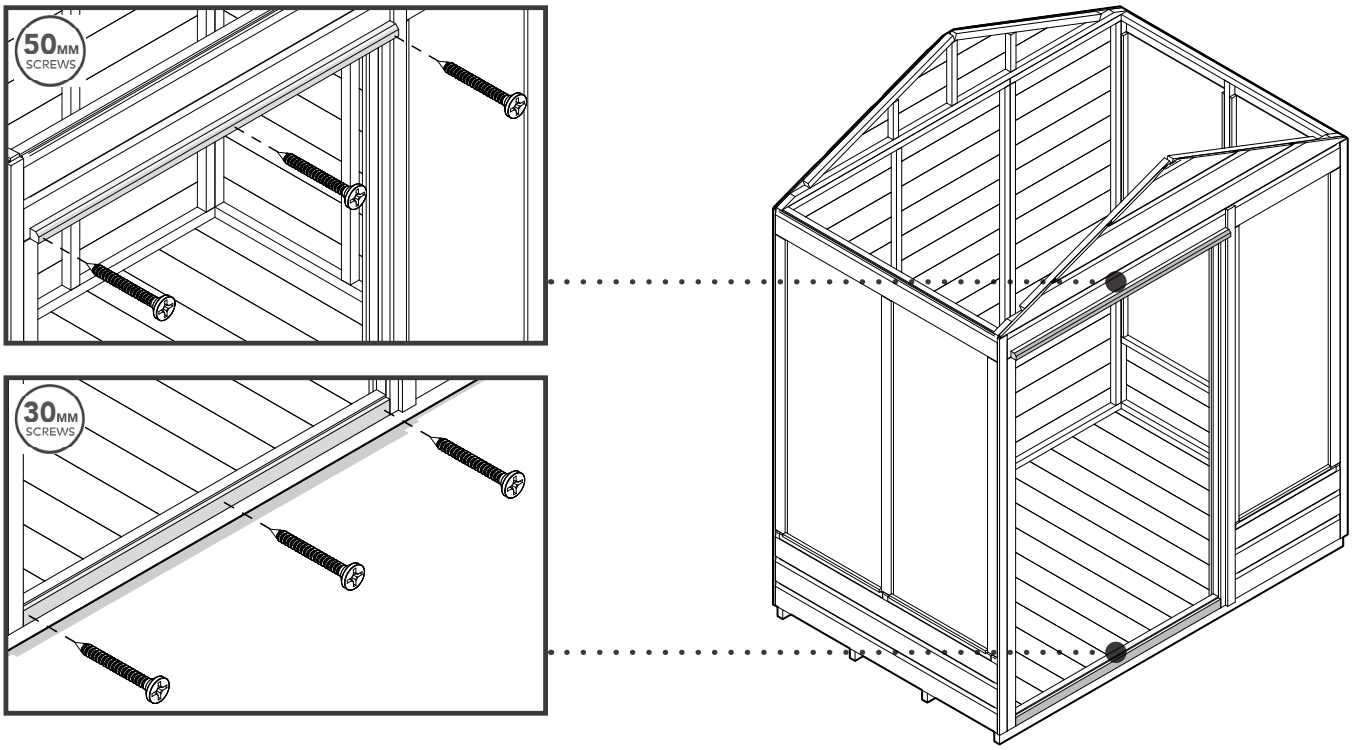

CANOPY STRIP & KICK PLATE

Position and secure the Kick Plate to the bottom of the Door Panel's framework in the door opening. **Position and secure the Canopy Strip** above the door opening, into the Door Panel's framework behind.

Canopy batten size (28x28x1140mm), Kick plate strip size (40x12x1090mm)

WORKSHOP TRUSS ASSEMBLY

FIXING PACK CONTAINS:

FIXING PACK CODE: *SUMWORKTRUSSFP*

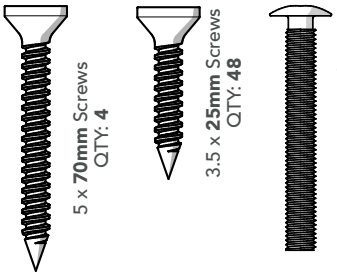

5 x **70mm** Screws
QTY: **4**

3.5 x **25mm** Screws
QTY: **48**

M6 x **60mm** Bolts
QTY: **4**

M6 Nut
QTY: **4**

M6 x **25mm** Washer
QTY: **4**

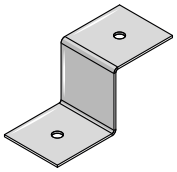

Z-Brackets (28mm)
QTY: **12**

TRUSS FIXING PACK CODE: *STPK21*
EXTRA U-BRACKETS (PACK OF 2) CODE: *MSUBPK2*

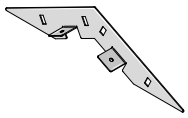

Truss Brackets
(*MSMTJB21*)
QTY: **2**

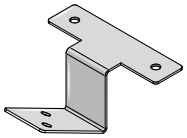

Hanger Brackets
(*MSTSB21*)
QTY: **2**

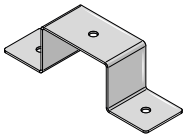

U-Brackets
(*MSUB*)
QTY: **4**

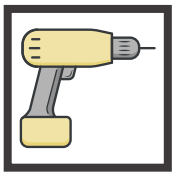

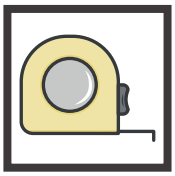

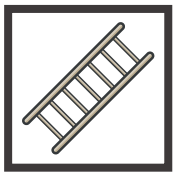

STEP 1: TRUSS ASSEMBLY

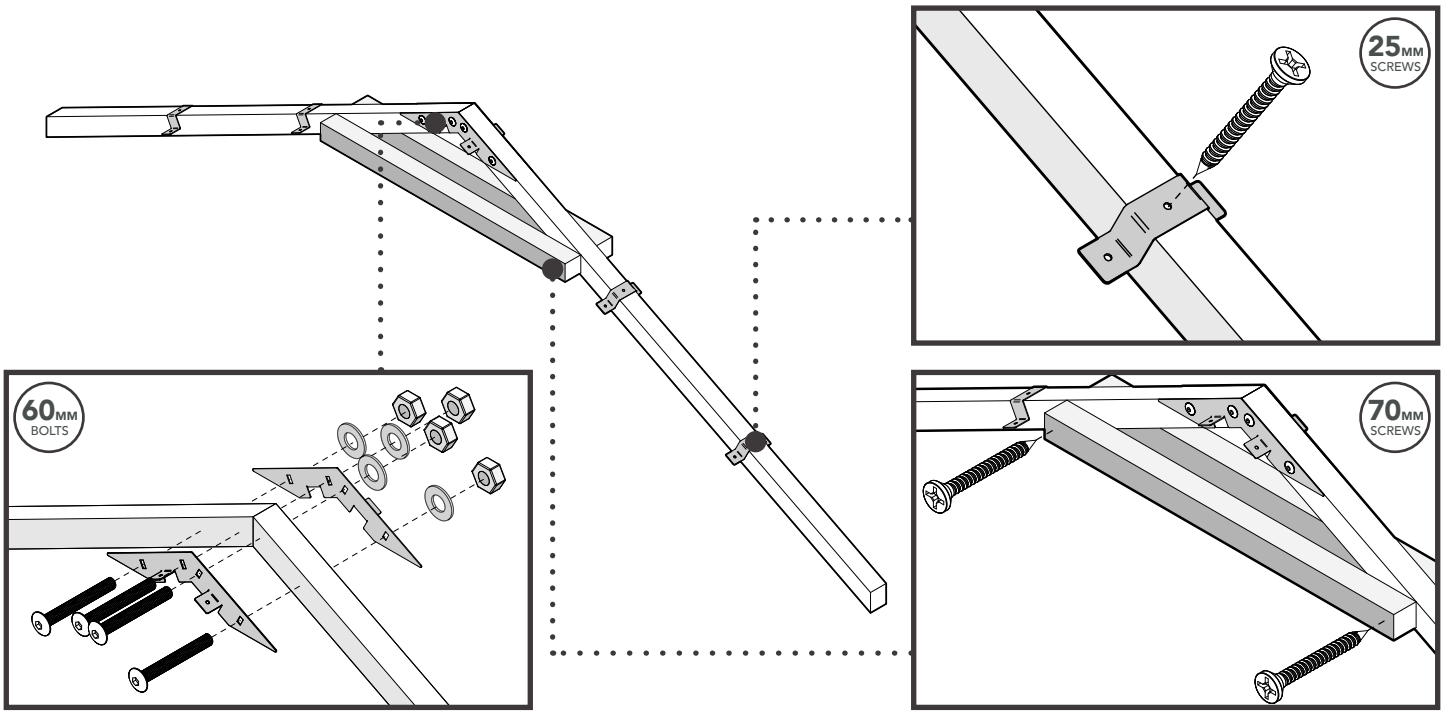

TRUSS BRACKETS

Assemble the Truss as shown above. Ensure the truss brackets are flush to the edge of the Angled Roof Beams to establish the correct angle.

U-BRACKETS & TRUSS BRACE

Space the U-brackets evenly and **secure them to the Angled Roof Beams.** Position and **secure 2 x Truss Brace to the Angled Roof Beams** as shown above.

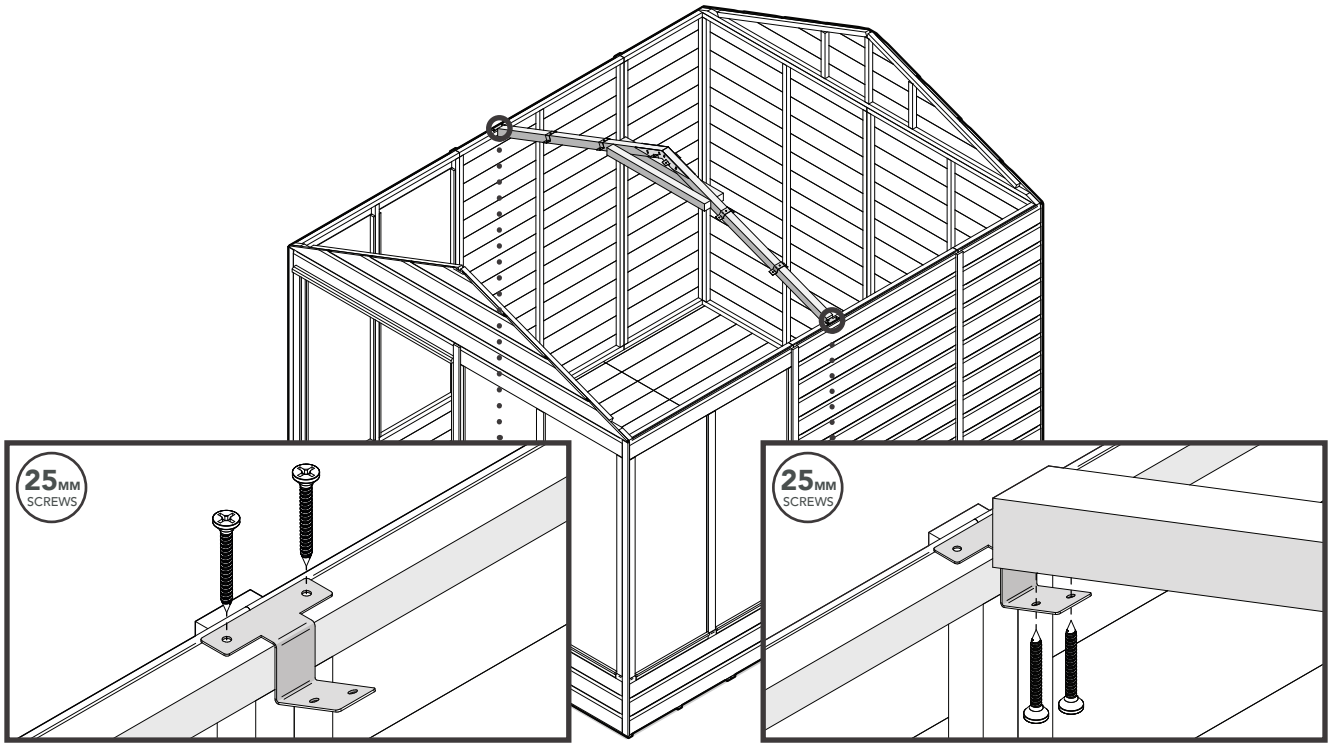

SECURE HANGER BRACKETS

Position and secure the hanger bracket to the centre of your summerhouse. There needs to be one on each side.

SECURE TRUSS

Position and secure the assembled truss to the hanger brackets. The truss will be centralised inside your summerhouse and facing the Apex Sections as shown above.

STEP 2: ROOF BEAMS ASSEMBLY

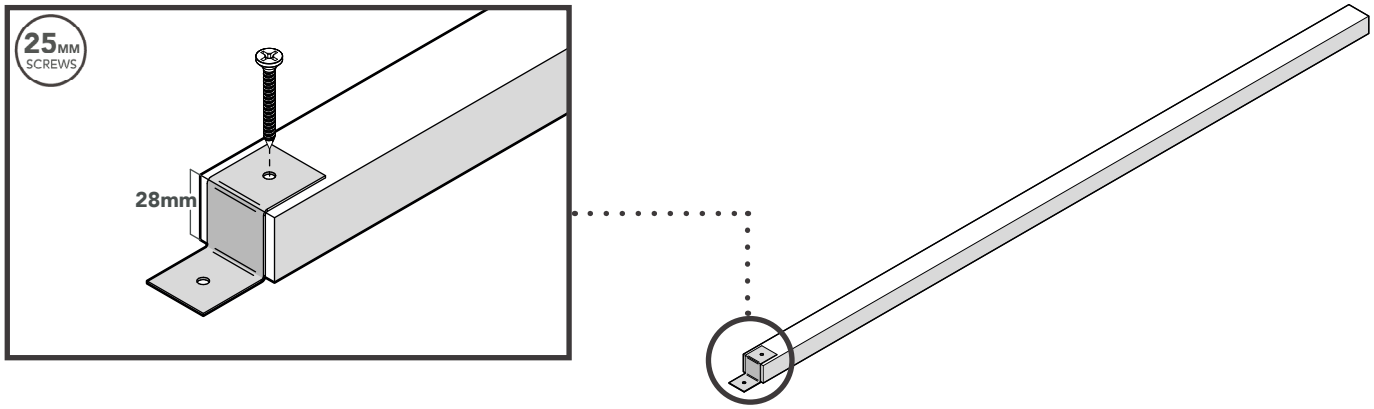

Z-BRACKETS

Position and secure a Z-bracket to one end on all your Roof Beams as shown above.
The Roof Beam should be flush to the Z-bracket.

8x6 Roof Beam (37x28x830mm), 8x10 Roof Beam (45x28x1421mm) 8x12 Roof Beam (45x28x1716mm)

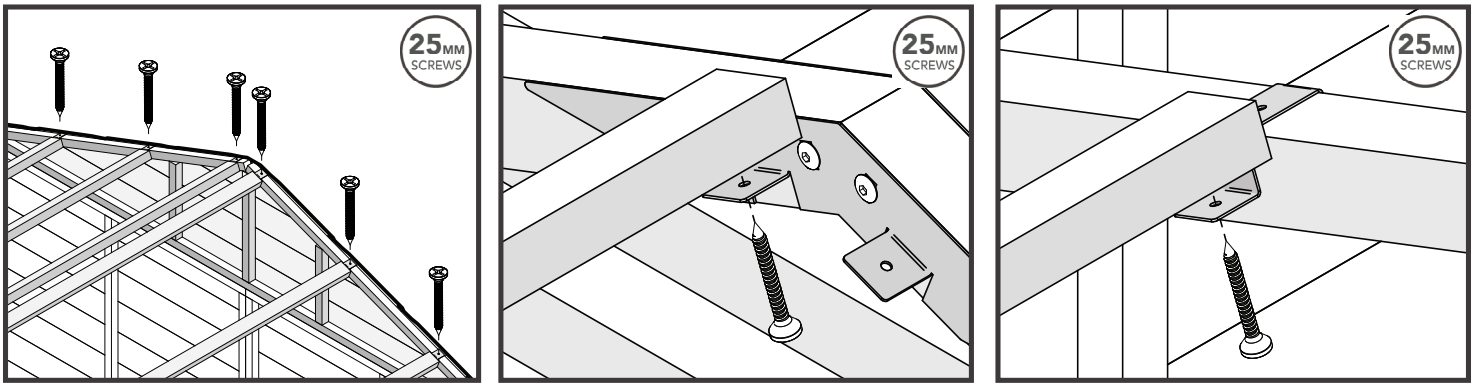

SECURE ROOF BEAMS TO TRUSS & APEX SECTIONS

Position and secure the Z-brackets to the Apex Sections and secure the other end of the Roof Beams to the U-brackets and truss brackets as shown above.

OSB ROOF SHEET & FELT

FIXING PACK CONTAINS:

FIXING PACK CODE: *SUMOSBOHROOFFP*

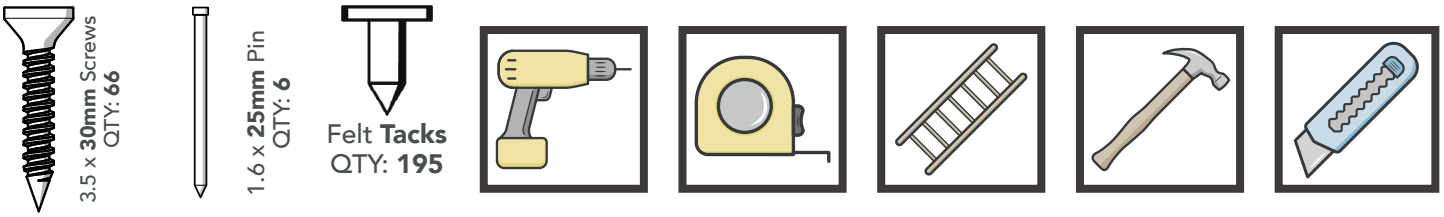

STEP 1: OSB ROOF SHEETS & ROOF STRIPS

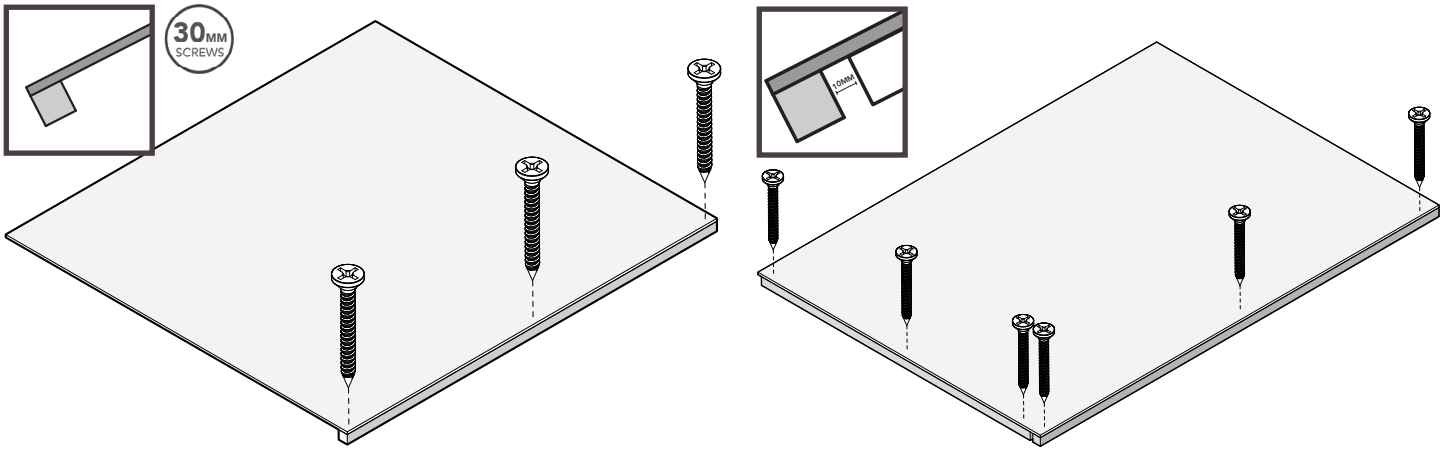

OSB ROOF SHEETS & ROOF STRIPS

Position and secure the Roof Strips along the edge of each OSB Roof Sheet as shown above. The side Roof Strips will be the same length as the OSB sheet edge. The front Roof Strips will be shorter with a 10mm gap from the side Roof Strip. Ensure the Roof Strips are flush to the OSB Roof Sheet edge. Repeat the process for multiple sheets.

8ft Front Roof Batten (28x28x1340mm)

STEP 2: SECURE ROOF SHEETS

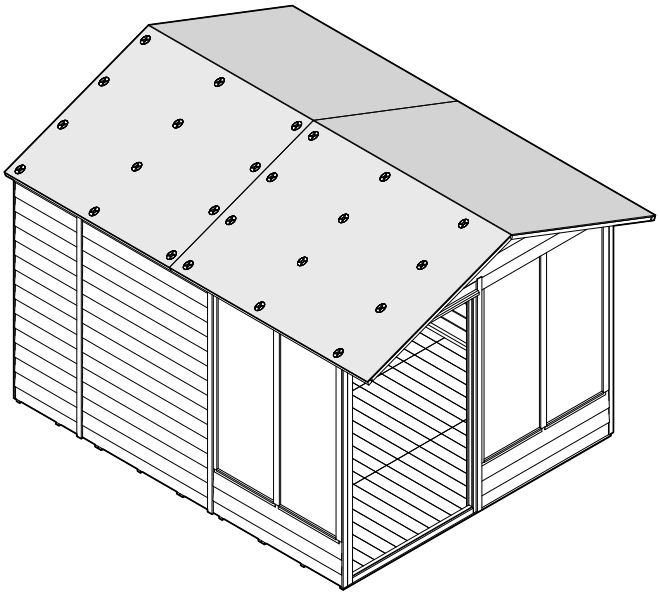

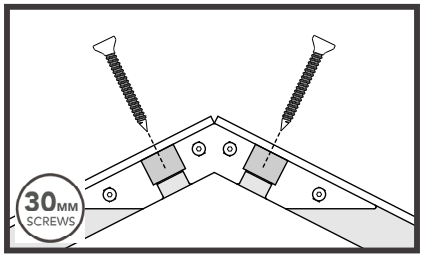

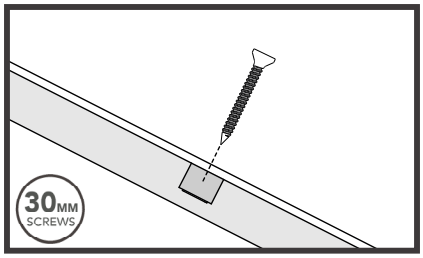

ROOF SHEETS

Position and secure the OSB Roof Sheets to the Apex Sections framework, Side Panels framework, Truss, and Roof Beams. Ensure each OSB Roof Sheet sits half way onto the Truss.

STEP 3: OVERHANG BOARD

APEX SUMMERHOUSES ONLY

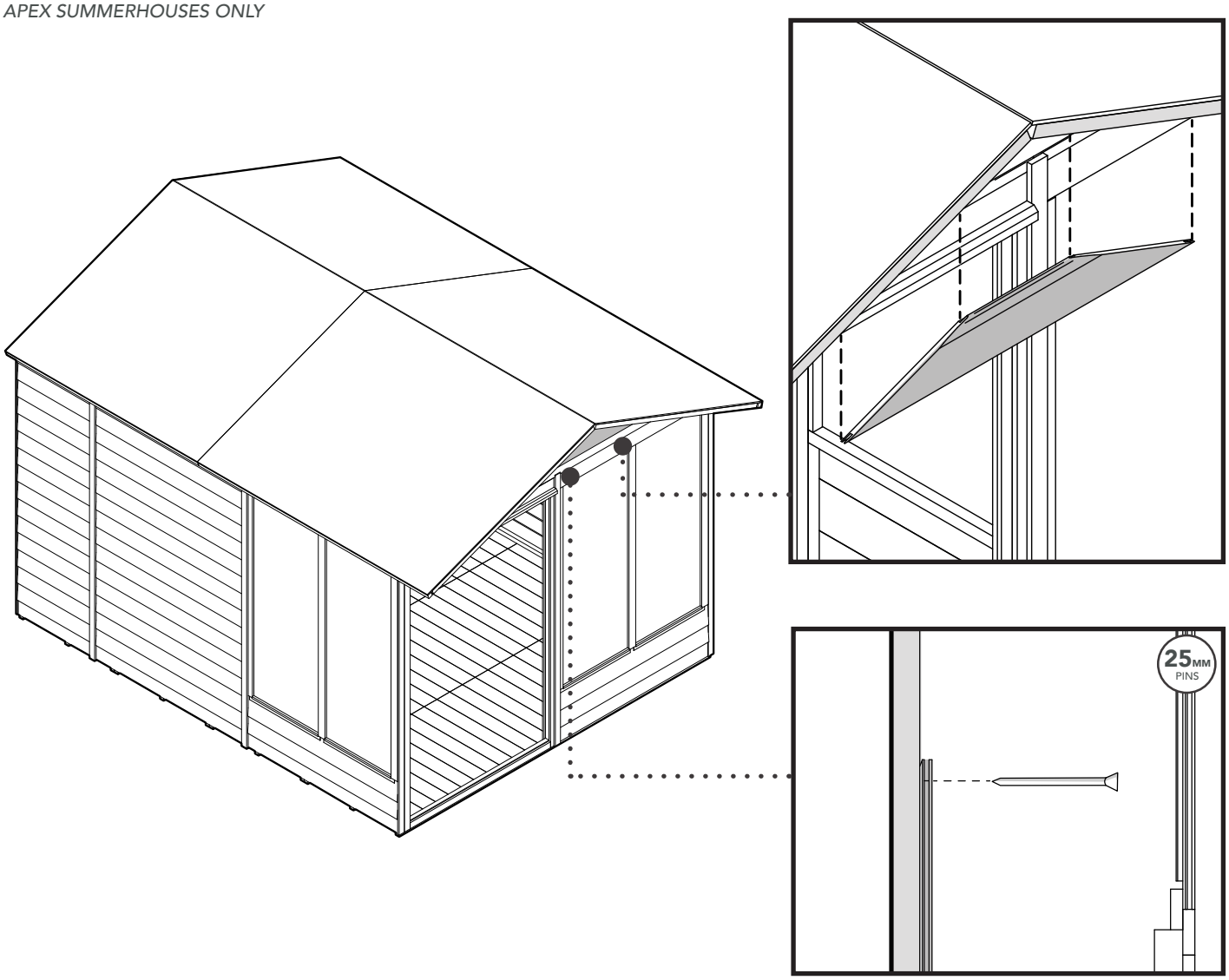

OVERHANG BOARD

Position the Overhang Board so that it sits up against the Front Roof Battens, ensuring it is flush to the Roof Sheets. Secure the Overhang Board into the Front Roof Battens from the inside, nailing in each corner.

STEP 3: FELT

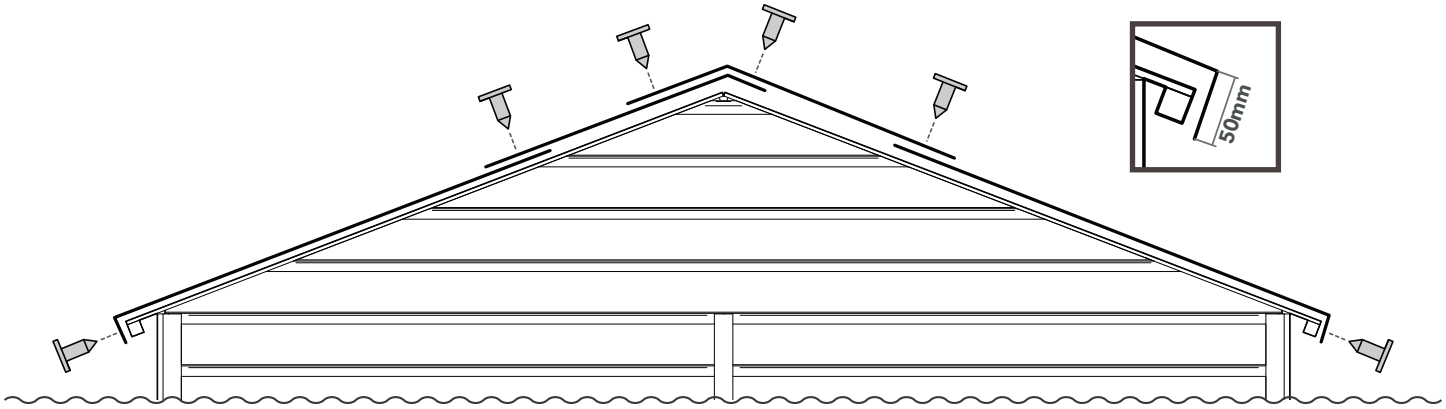

4 x FELT PIECES

Measure out 4 equal lengths, cut with a sharp knife, overlap them on top, around the edges and fold the corners; tack to keep secure. Ensure there is a 50mm overhang at the bottom and work from the bottom to the top. Hammer the tacks into the felt at 150mm intervals.

FASCIA'S & FINIALS

FIXING PACK CONTAINS:

FIXING PACK CODE: *4LIFESUMFASCIASFP*

4 x **40mm** Screws
QTY: **14**

3.5 x **25mm** Screws
QTY: **4**

1.6 x **25mm** Pin
QTY: **2**

4 LIFE **Badge**
QTY: **1**

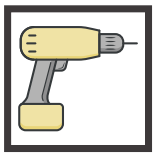

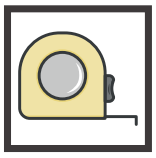

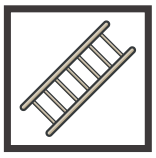

STEP 1: FASCIA ASSEMBLY

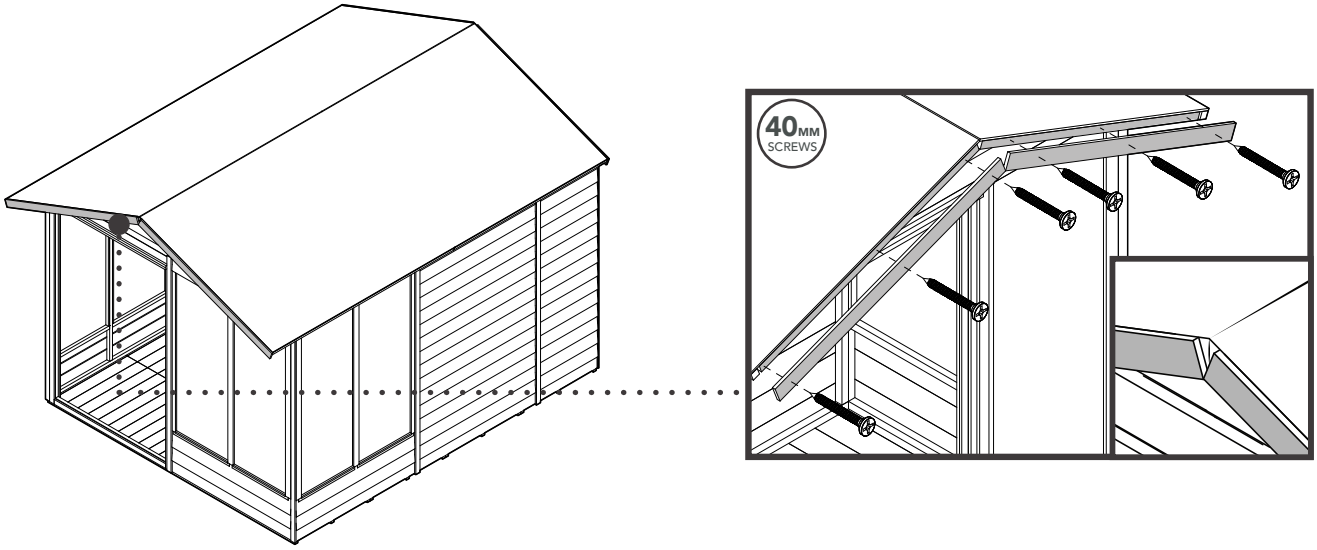

FASCIA'S

Position and secure the Fascia's to the front and back of your summerhouse as shown above. The fascia's bottom edge will meet each other when positioning. Ensure to secure the Fascia's into the Apex Sections framework behind.

STEP 2: FINIAL ASSEMBLY

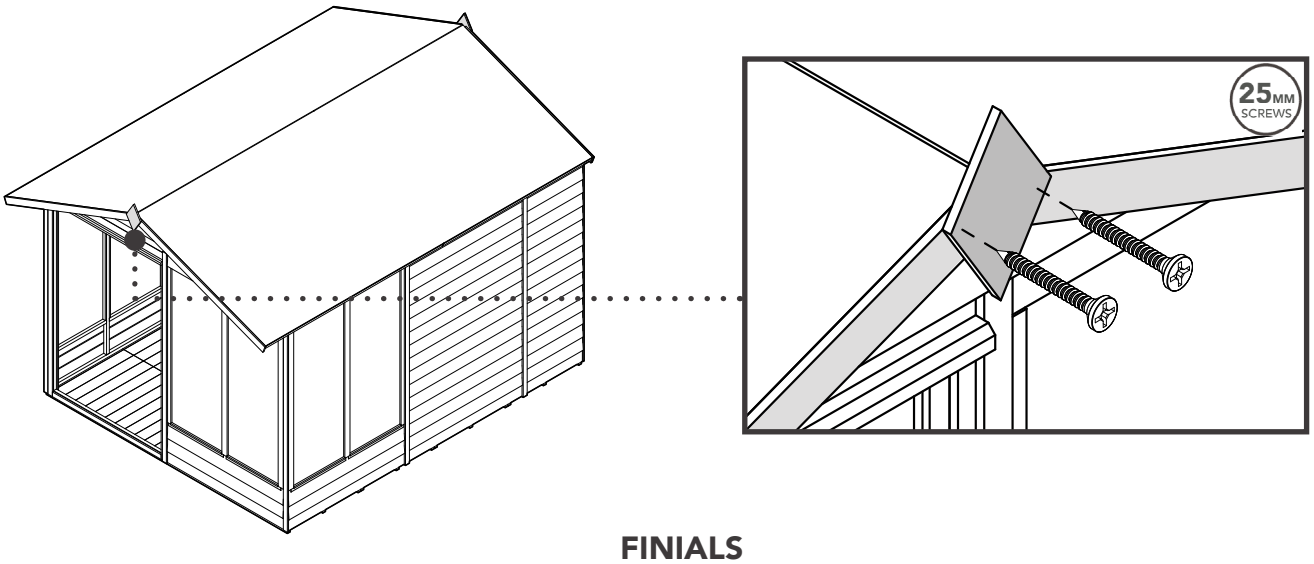

FINIALS

Position and secure the Finials to the Fascia's as shown above. Ensure to secure through the Fascia's into the framework behind.

STEP 3: BADGE

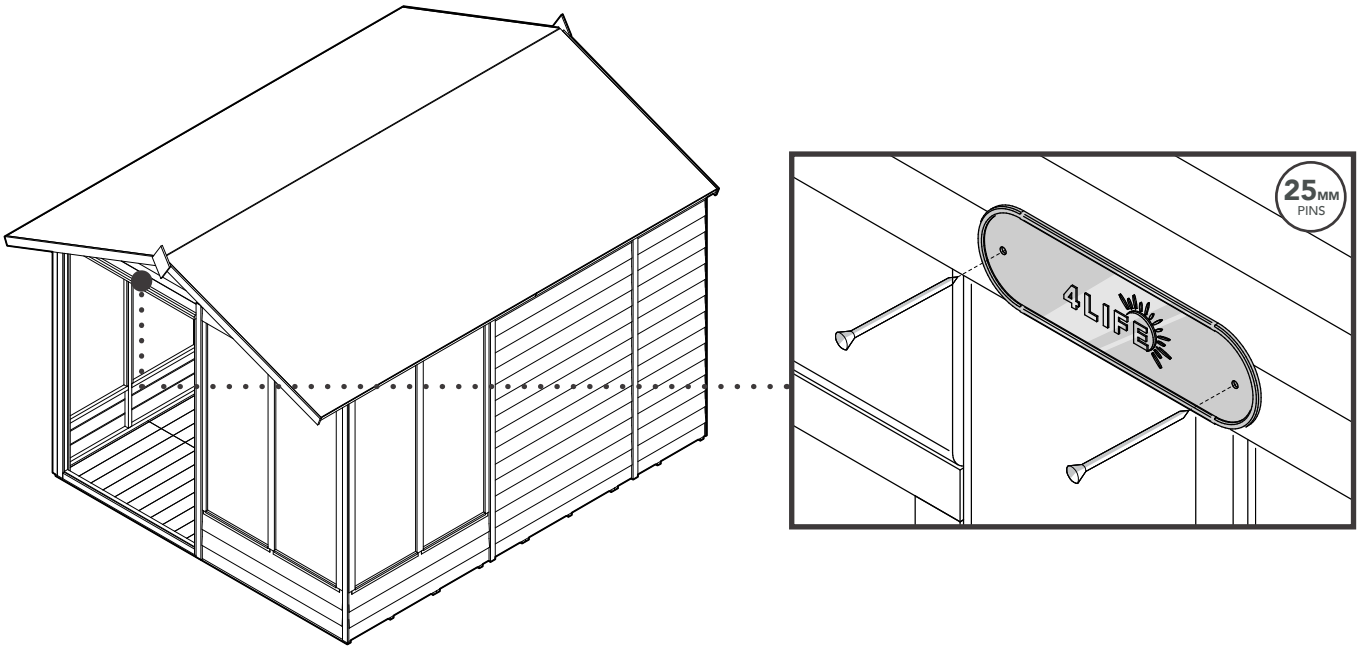

PIN YOUR BADGE

Position and secure your badge above the door opening, into the Canopy Strip with the pins provided.

DOUBLE DOOR INSTALLATION

FIXING PACK CONTAINS:

FIXING PACK CODE: *SUMDOUBLEDOORFP*

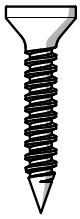

3.5 x **30mm** Screws
QTY: **3**

3.5 x **25mm** Screws
QTY: **44**

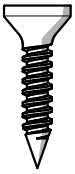

3.5 x **10mm** Screws
QTY: **2**

1.6 x **25mm** Panel Pin
QTY: **28**

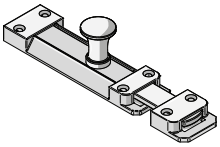

Door **Bolt** (150mm)
QTY: **1**

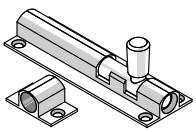

Barrel **Bolts** (75mm)
QTY: **3**

Turn **Buttons**
QTY: **2**

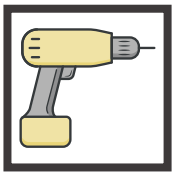

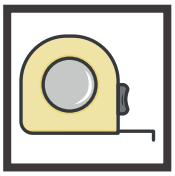

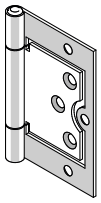

Flush **Hinges**
QTY: **6**

Hotbed **Handles**
QTY: **2**

STEP 1: DOOR PREPARATION

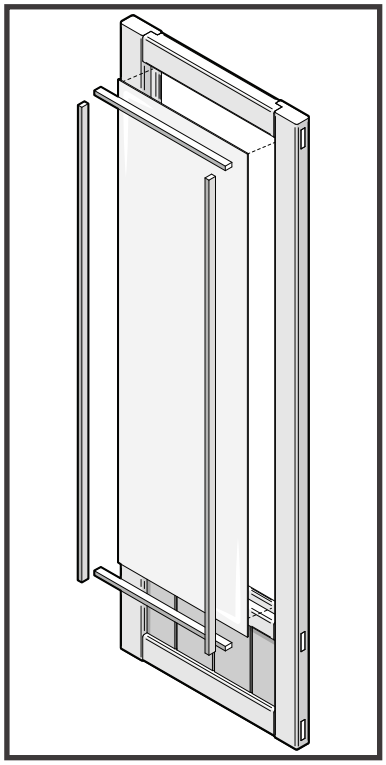

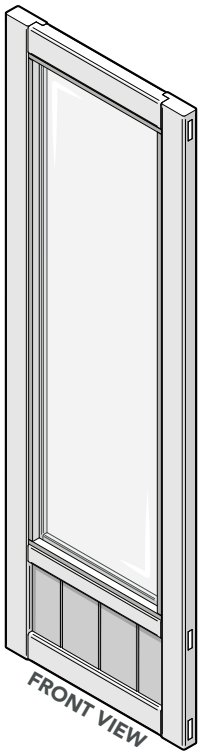

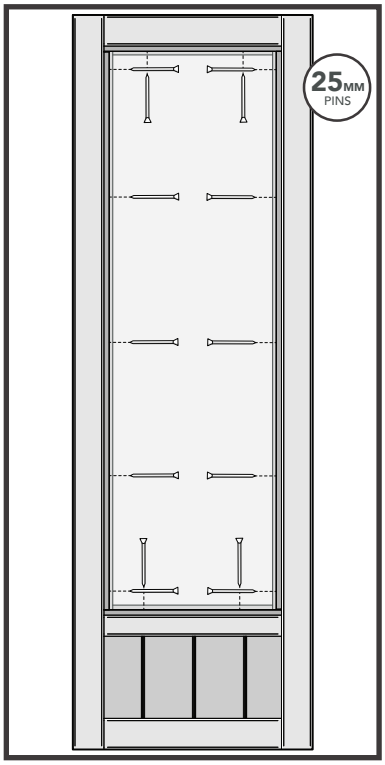

DOOR ASSEMBLY

Lay your Doors down onto a soft surface, remove the protective film from the Windows, and **insert the Windows into the opening,** onto the surrounding lip provided. **Insert the Top and Bottom Beading first, and then the Side Beading.**

SECURE DOOR BEADING

Secure the beading into place as shown above. Be careful not to hit the Window when pinning the beading into place. Preferably use a rubber mallet for this step.

Door window size (395x1277mm), Top and bottom beading size (20x12x400mm), Side beading size (20x12x1256mm)

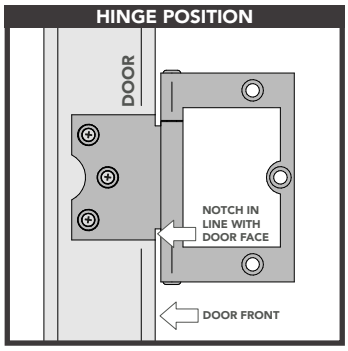

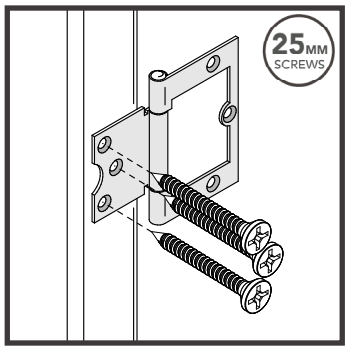

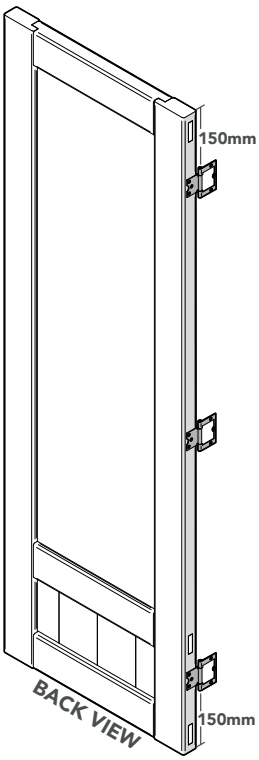

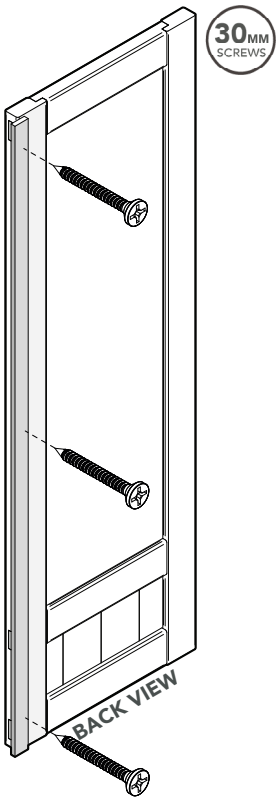

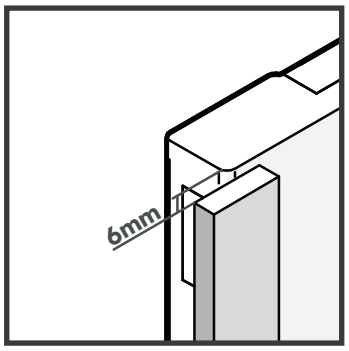

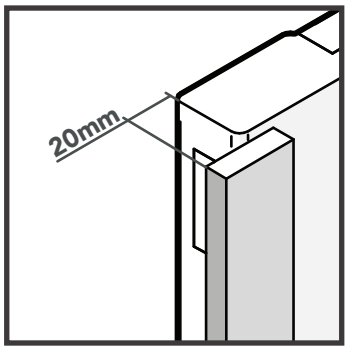

DOOR HINGES

Position and secure 3 x hinges to the Door framework using the measurement provided. **Please take note of the hinge position.** Repeat the process for both Doors.

SLAMMING STRIP

Secure the Slamming Strip to one of your Doors as this will be your 'closed' Door. Ensure you screw through the Slamming Strip into the Door framework as shown above.

Slamming strip size (40x12x1647mm)

STEP 2: DOOR INSTALLATION

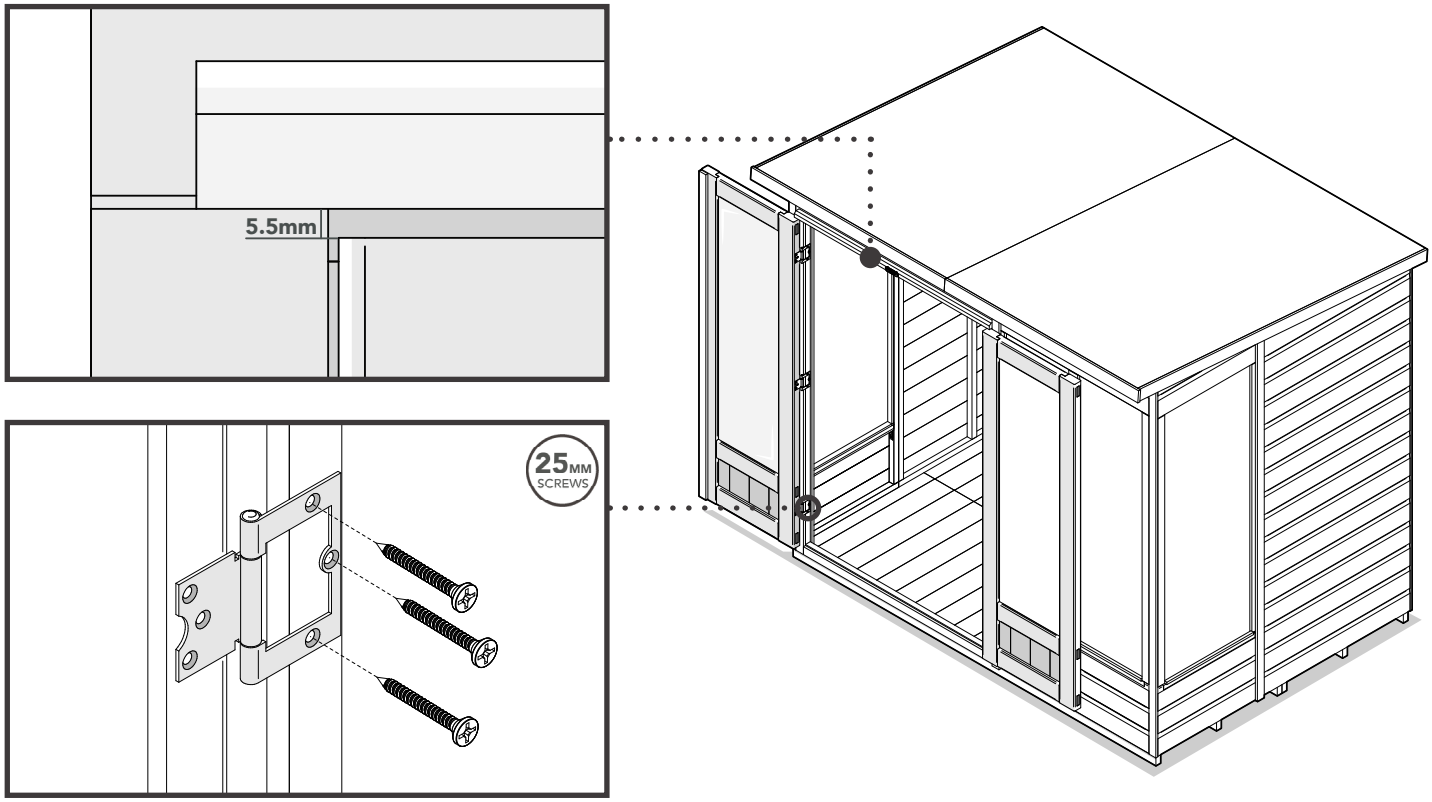

DOOR INSTALLATION

Position the Door into the door opening, ensuring it is level. Ensure the hinges are up against the framework. **Secure the hinges in place.** Allow a 5.5mm gap at the top when positioning the Door. Repeat the process for both Doors.

STEP 3: DOOR FIXINGS

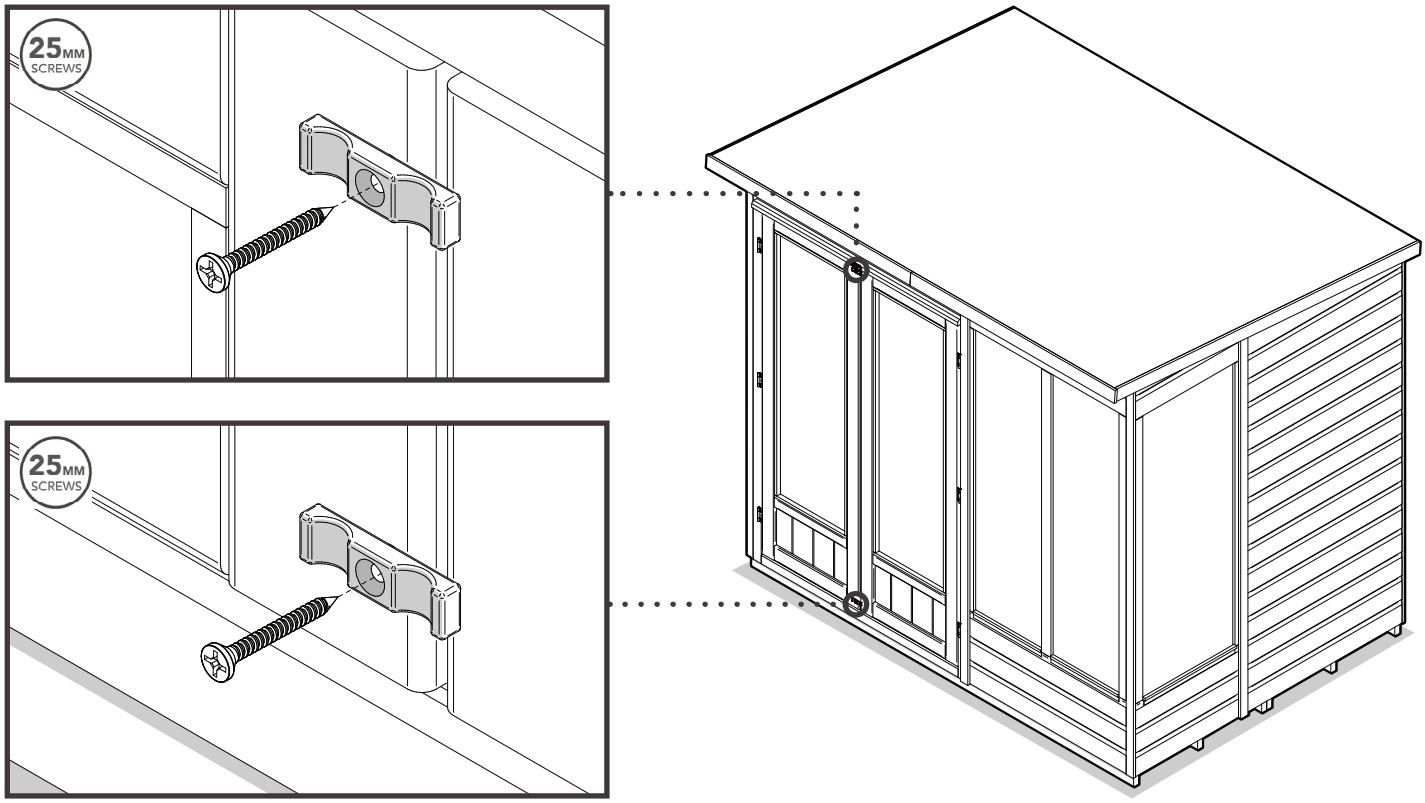

TURN BUTTONS

Position and secure a turn button to the top and bottom of the Door framework.
Secure your turn buttons to your 'closed' Door.

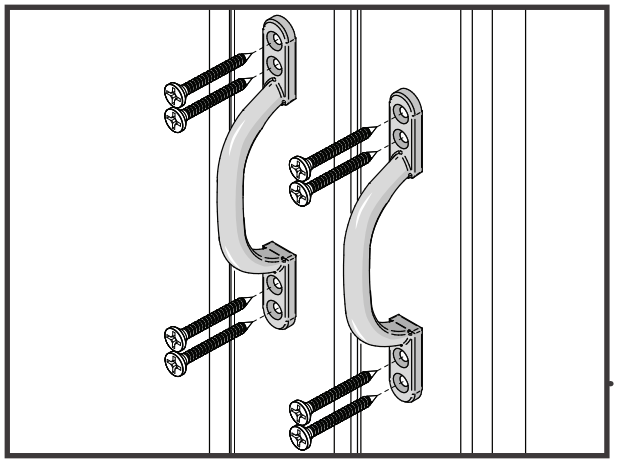

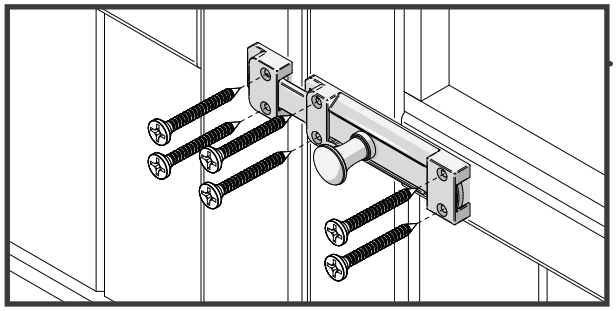

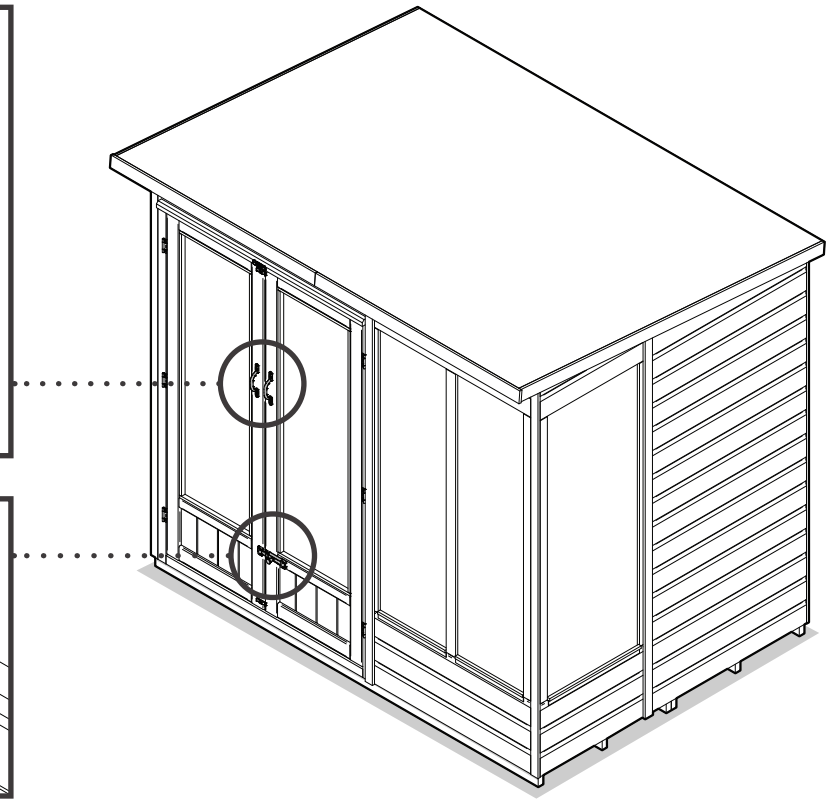

HOTBED HANDLES

Position and secure the Hotbed Handles to the Doors framework with the screws provided. Position the handles to your desired height. **Use a screwdriver to tighten the fixings.**

DOOR BOLT

Position and secure the Door Bolt to the Doors framework with the screws provided. **Secure the receiver** to the 'closed' Door as shown above. **Use a screwdriver to tighten the fixings.**

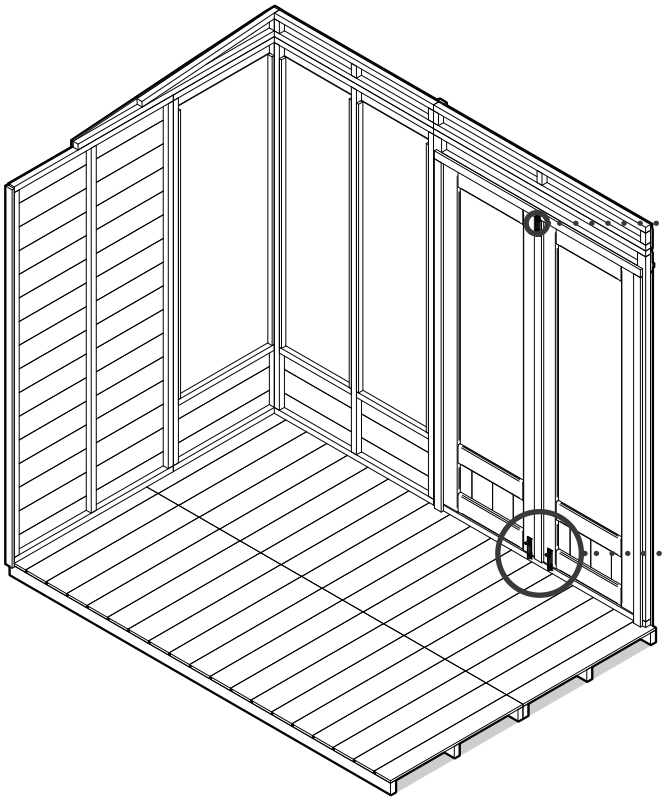

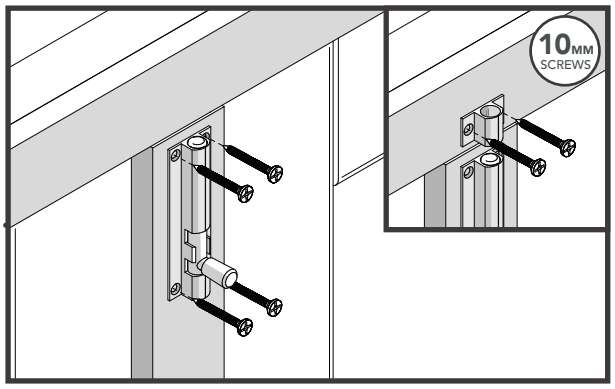

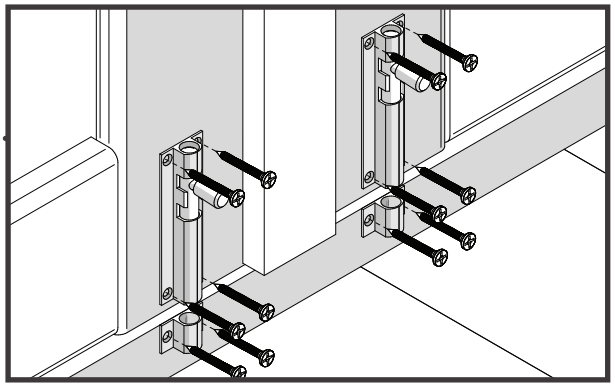

BARREL BOLTS

Position and secure the top Barrel Bolt to the Slamming Strip using the fixings provided. Secure its Receiver to the Top Weather Strip with 10mm screws. **Position and secure the bottom Barrel Bolts** and Receivers to the Doors framework and Door Panel.