7x5 SHIPLAP PENT SHED PARTS LIST (SPP752WM) - 2 WINDOWS

FLOOR PLAN

Please take note of the corner position, as this indicates the panel orientation during construction. This will apply to all of the corners for your chosen shed.

Same size panels are interchangeable. Hinge your door onto either side.

- A 1ft Panel (295 x 1831mm)
- B 3ft Panel (885 x 1831mm) (With & without windows)
- C 4ft Panel (1180 x 1831mm)

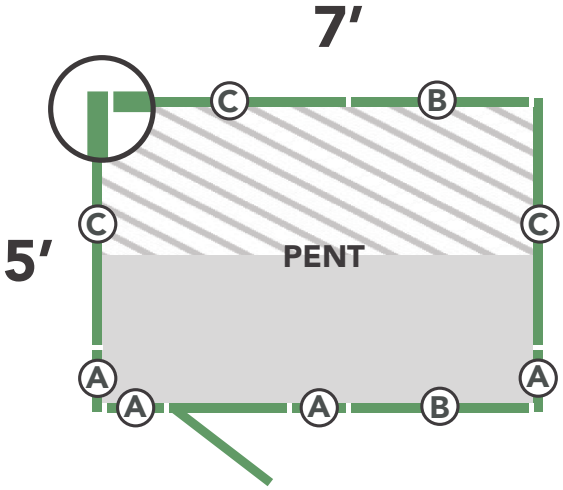

CHECK YOU HAVE ALL YOUR PARTS PRIOR TO ASSEMBLY

The parts do not have codes on them. They are listed below should you need to order one.
The components provided may be heavy. Please lift with caution and with a minimum of 2 people.

7x5 Shiplap Pressure Treated Pent Shed - 2 Windows (SPP752WM)			
Label	*Part Code*	Description	Qty
1	*MSTGFL257*	Floor (737x2121mm)	2
2	*SPM295PP*	1ft Plain Panel (295x1831mm)	4
3	*SPM885WP*	3ft Window Panel (885x1831mm)	1
4	*SPM885PP*	3ft Plain Panel (885x1831mm)	1
5	*SPM1180PP*	4ft Plain Panel (1180x1831mm)	3
6	*SPM590PIFP*	2ft Infill Panel (590x122mm)	1
7	*SPM885PIFP*	3ft Infill Panel (885x122mm)	1
8	*SPM1180PIFP*	4ft Infill Panel (1180x122mm)	1
9	*SPPMLHA5*	Left Apex Section (123x1120mm)	1
10	*SPPMRHA5*	Right Apex Section (123x1120mm)	1
11	*85009*	Plastic Z-Strip (30x12x610mm)	2
12	*28280400PT*	Window Sill (28x28x400mm)	2
13	*HMA121120885PT*	Top Batten (121x12x885mm)	1
14	*XT395600*	Window (395x600mm)	2
15	*P24120600PT*	Interior Window Strip (24x12x600mm)	4
16	*P40120560PT*	Window Cover Strip (40x12x560mm)	2
17	*P52120560PT*	Window Cover Strip (52x12x560mm)	1
18	*28280590PT*	Door Batten (28x28x590mm)	2
19	*P40121823PT*	Back Cover Strip (40x12x1823mm)	5
20	*P40121940PT*	Front Cover Strip (40x12x1940mm)	3
21	*38121710PPT*	Door Weather Strip (38x12x1710mm)	1
22	*28121637PPT*	Slamming Strip (28x12x1637mm)	1
23	*45451419PPT*	Pent Roof Beam (45x45x1419mm)	1
24	*OSB168811158*	OSB Roof Sheet (1688x1115x8mm)	2
25	*28281115PT*	Front & Back Roof Strip (28x28x1115mm)	4
26	*28280816PT*	Side Roof Strip (28x28x816mm)	4
27	*P59121688PT*	Side Fascia (59x12x1688mm)	2
28	*P59121132PT*	Front Fascia (59x12x1132mm)	2
29	*MSPDR*	Door (582x1692mm)	1
Felt - Please contact our aftersales team with your product code if you are missing your felt.			

Use the labelled components on the next page to help identify the part code and description.

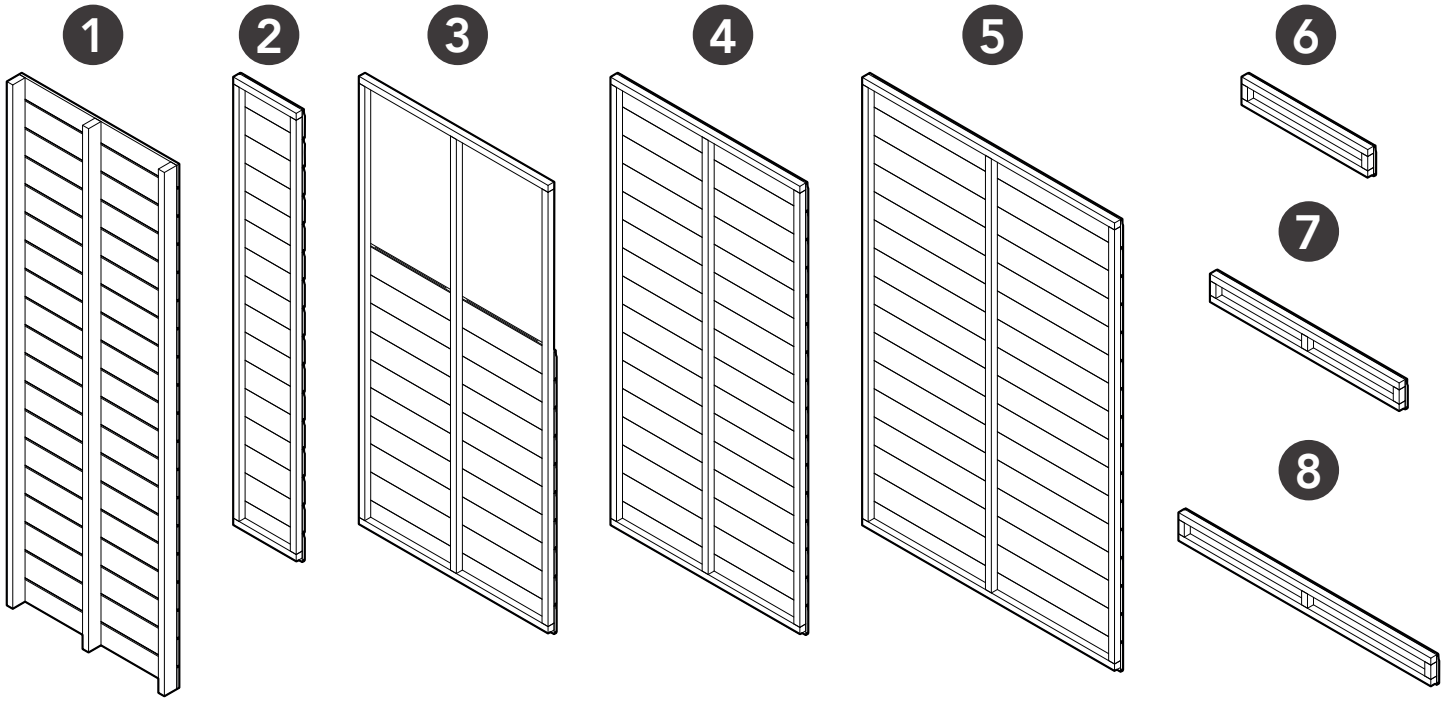
1
2
3
4
5
6
7
8

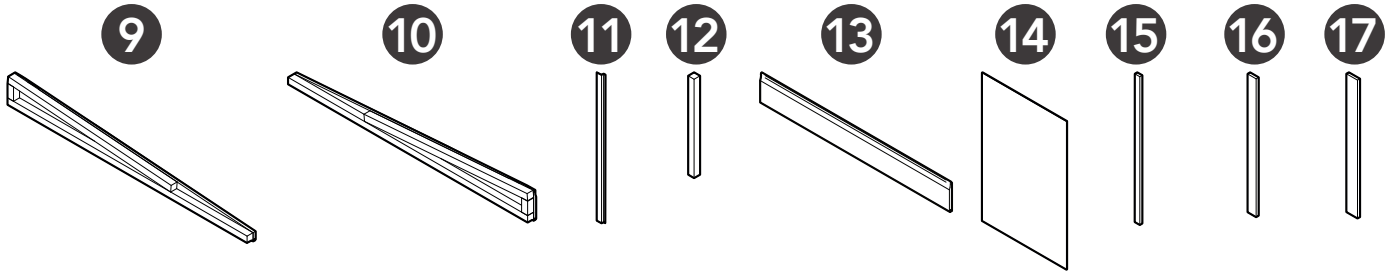
9
10
11
12
13
14
15
16
17

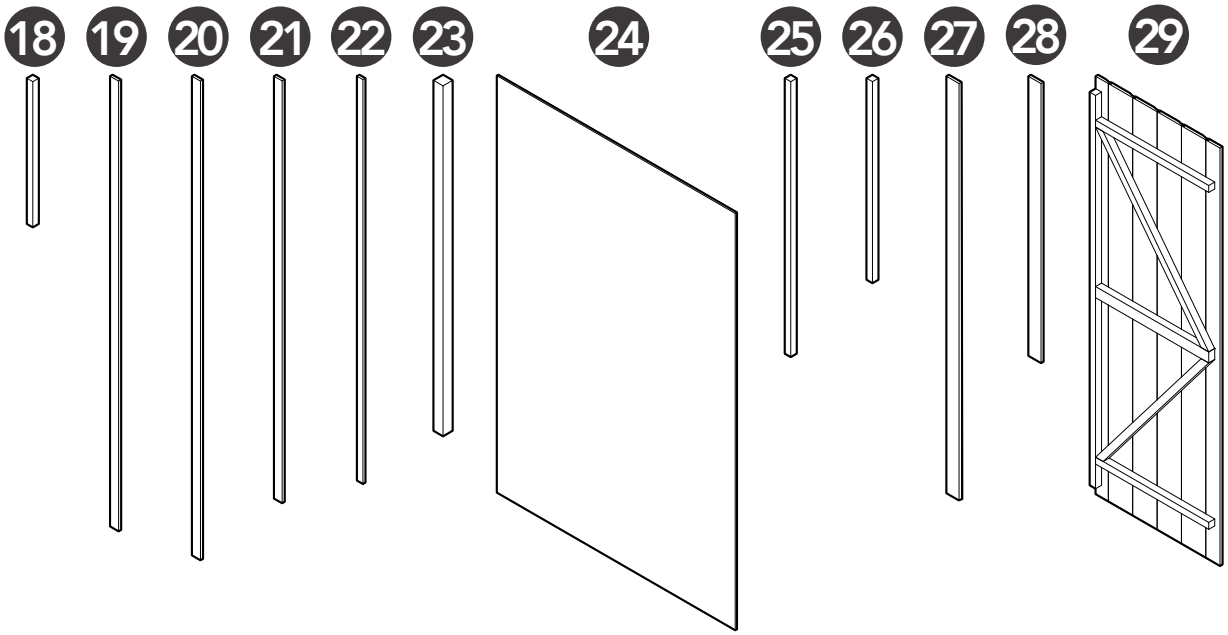
18
19
20
21
22
23
24
25
26
27
28
29