6x4 SHIPLAP APEX SUMMERHOUSE PARTS LIST (BWAS64DD5WM) - 5 WINDOWS

FLOOR PLAN

Please take note of the corner position, as this indicates the panel orientation during construction. This will apply to all of the corners for your chosen summerhouse.

Same size panels are interchangeable.

- (A) **2ft Panel (590 x 1831mm)** **(With & without windows)**
- (B) **4ft Panel (1180 x 1831mm)** **(With & without windows)**
- (C) **4ft Door Panel (1180 x 1831mm)**

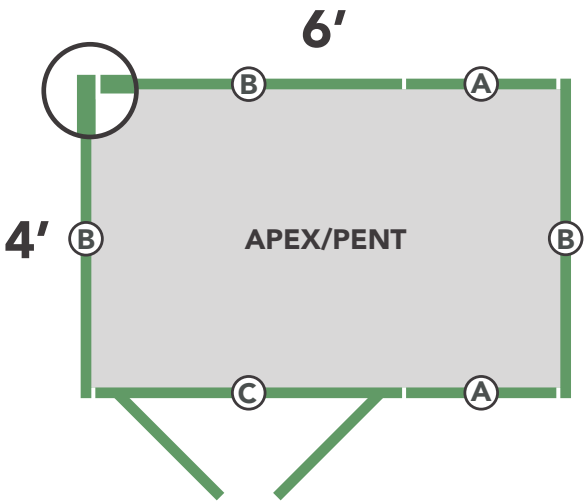

CHECK YOU HAVE ALL YOUR PARTS PRIOR TO ASSEMBLY

The parts do not have codes on them. They are listed below should you need to order one.
The components provided may be heavy. Please lift with caution and with a minimum of 2 people.

6x4 Shiplap Pressure Treated Apex Summerhouse - 5 Windows (BWAS64DD5WM)			
Label	Part Code	Description	Qty
1	MSTGFL46	Floor (1180x1826mm)	1
2	SPM590PP	2ft Plain Panel (590x1831mm)	1
3	SPMS590WP	2ft Window Panel (590x1831mm)	1
4	SPM1180PP	4ft Plain Panel (1180x1831mm)	1
5	SPMS1180WP	4ft Window Panel (1180x1831mm)	2
6	SPMS1180DDP	4ft Door Panel (1180x1831mm)	1
7	SPAMPEA6	Apex Section (1840x360mm)	2
8	85009	Plastic Z-Strip (30x12x610mm)	5
9	28280534PT	Window Sill (28x28x534mm)	1
10	28280548PT	Window Sill (28x28x548mm)	4
11	XT5301390	Window (530x1390mm)	1
12	XT5451390	Window (545x1390mm)	4
13	P24121390PT	Interior Window Strip (24x12x1390mm)	10
14	P15120512PT	Beading (15x12x521mm)	4
15	15120485PPT	Beading (15x12x485mm)	1
16	P40121823PT	Cover Strip (40x12x1823mm)	6
17	P38121683PT	Door Weather Strip (38x12x1683mm)	2
18	P38121146PT	Top Weather Strip (38x12x1146mm)	1
19	28281140PBNPT	Canopy Strip (28x28x1140mm)	1
20	P40121090PT	Kick Plate Strip (40x12x1090mm)	1
21	37281124KDPT	Roof Beam (37x28x1124mm)	4
22	OSB149110568	OSB Roof Sheet (1491x1056x8mm)	2
23	28281491PT	Roof Strip (28x28x1491mm)	2
24	P59121042PT	Fascia's (59x12x1042mm)	4
25	FIN23214212PT	Finial (232x142x12mm)	2
26	PTMSDR	Door (540x1654mm)	2
27	XT3951277	Window (395x1277mm)	2
28	P20120400PT	Door Beading (20x12x400mm)	4
29	P20121256PT	Door Beading (20x12x1256mm)	4
30	P40121647PT	Slamming Strip (40x12x1647mm)	1
31	HMA121120885AII21PT	Overhang Board (121x12x885)	1
32	28281005PT	Roof Strip (28x28x1005mm)	2
Felt - Please contact our aftersales team with your product code if you are missing your felt.			

Use the labelled components on the next page to help identify the part code and description.

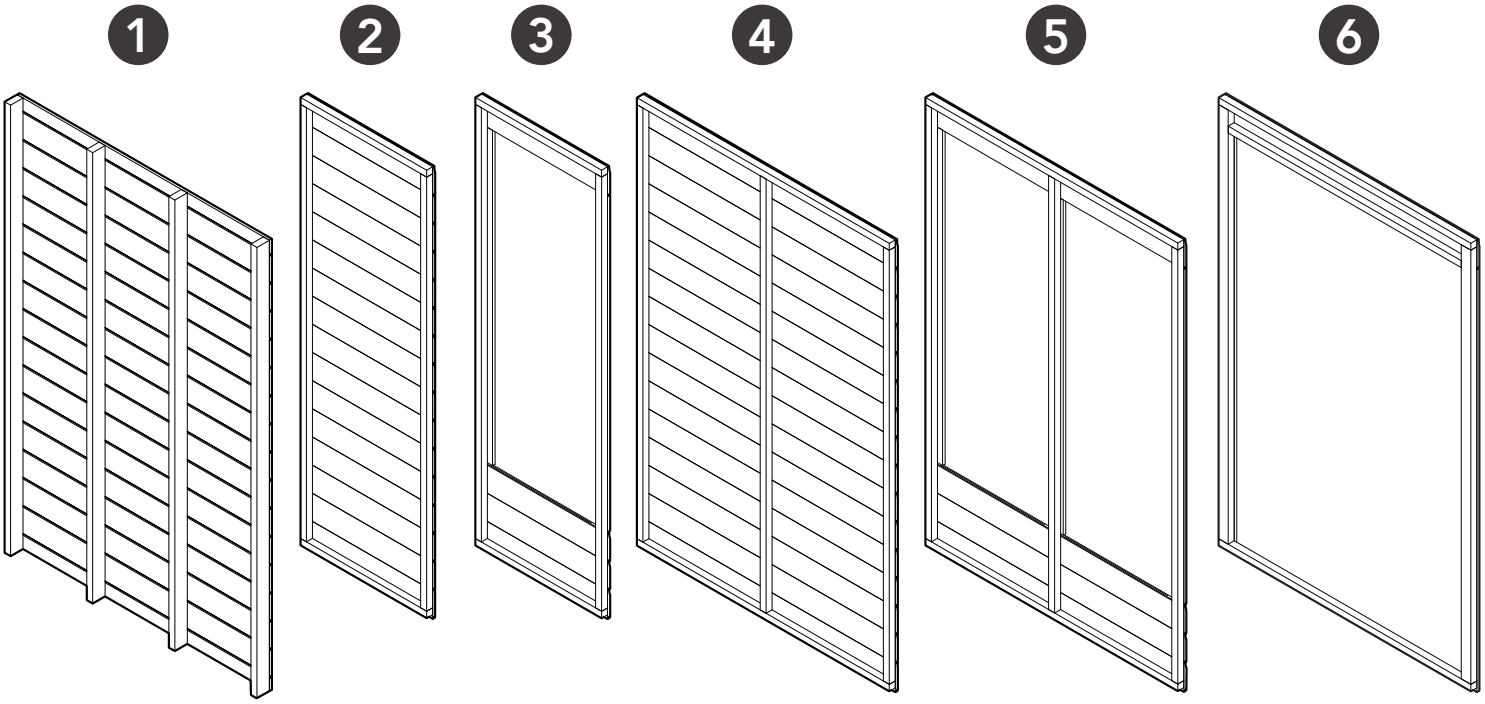
1
2
3
4
5
6

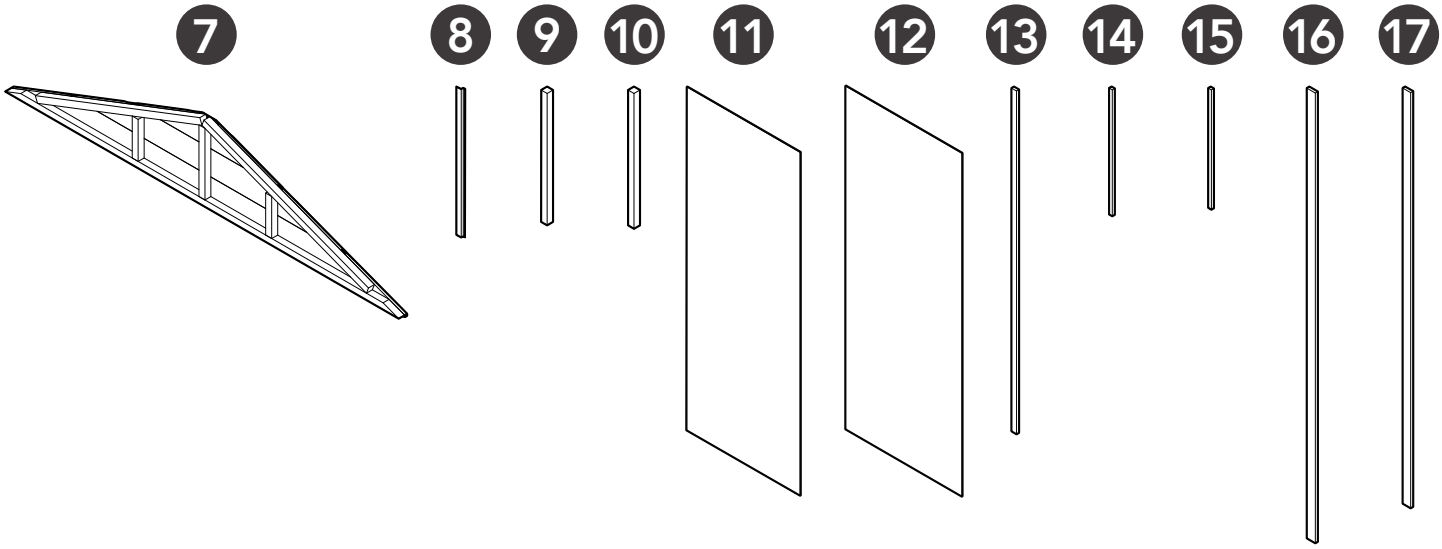
7
8
9
10
11
12
13
14
15
16
17

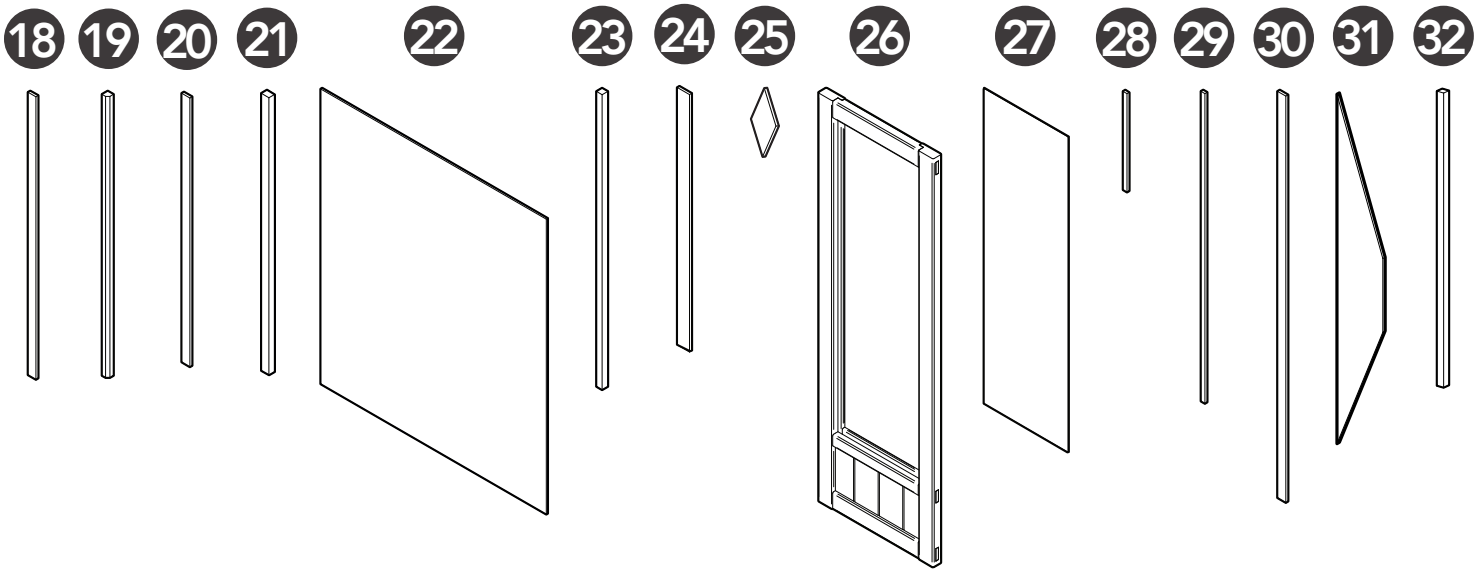
18
19
20
21
22
23
24
25
26
27
28
29
30
31
32