10x10 OVERLAP REVERSE APEX SHED PARTS LIST (4LR1010DD4WM) - 4 WINDOWS

FLOOR PLAN

Please take note of the corner position, as this indicates the panel orientation during construction. This will apply to all of the corners for your chosen shed.

Same size panels are interchangeable. Hinge your door onto either side.

- **A** 3ft Panel (885 x 1831mm) (With & without windows)
- **B** 4ft Panel (1180 x 1831mm)
- **C** 4ft Door Panel (1180 x 1831mm)

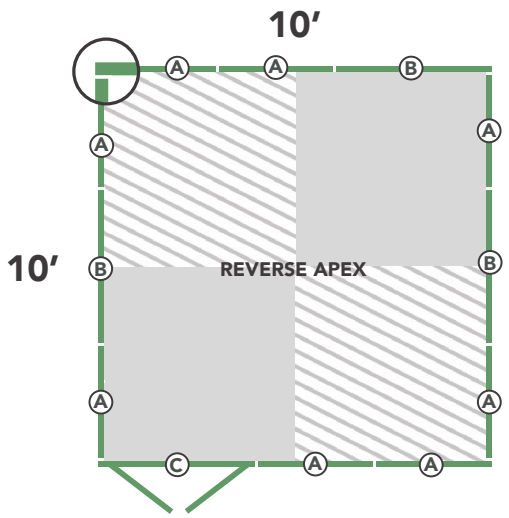

CHECK YOU HAVE ALL YOUR PARTS PRIOR TO ASSEMBLY

The parts do not have codes on them. They are listed below should you need to order one.
The components provided may be heavy. Please lift with caution and with a minimum of 2 people.

10x10 Overlap Pressure Treated Double Door Reverse Apex Shed - 4 Windows (4LR1010DD4WM)			
Label	*Part Code*	Description	Qty
1	*MWSBFL55*	Floor (1475x1503mm)	4
2	*4L885PP*	3ft Plain Panel (885x1831mm)	6
3	*4L885WP*	3ft Window Panel (1180x1831mm)	2
4	*4L1180PP*	4ft Plain Panel (1180x1831mm)	3
5	*SPMS1180DDP*	4ft Door Panel (1180x1831mm)	1
6	*4LPEA5LH*	Apex Section (1510x596mm)	2
7	*4LPEA5RH*	Apex Section (1510x596mm)	2
8	*134070885PT*	Top Board (134x70x885mm)	2
9	*28280400PT*	Window Sill (28x28x400mm)	8
10	*RPET885*	Window (428x514mm)	4
11	*P28120545PT*	Window Cover Strip (28x12x545mm)	6
12	*28161088PT*	Door Strip (28x16x1088mm)	1
13	*P40121823PT*	Cover Strip (40x12x1823mm)	12
14	*P40120545PT*	Cover Strip (40x12x545mm)	2
15	*38121710PPT*	Door Weather Strip (38x12x1710mm)	2
16	*45451596PAII69PT*	Angled Roof Beams (45x45x1596mm)	2
17	*45450895PPT*	Truss Brace (45x45x895mm)	2
18	*45281421PPT*	Roof Beam (45x28x1421mm)	12
19	*OSB170614918*	OSB Roof Sheet (1706x1491x8mm)	4
20	*28281491PT*	Roof Strip (28x28x1491mm)	4
21	*P59121695PT*	Fascia's (59x12x1695mm)	4
22	*FIN23214212PT*	Finial (232x142x12mm)	2
23	*MSPDDR*	Door (537x1692mm)	2
24	*45281640PT*	Slamming Strip (45x28x1640mm)	1
Felt - Please contact our aftersales team with your product code if you are missing your felt.			

Use the labelled components on the next page to help identify the part code and description.

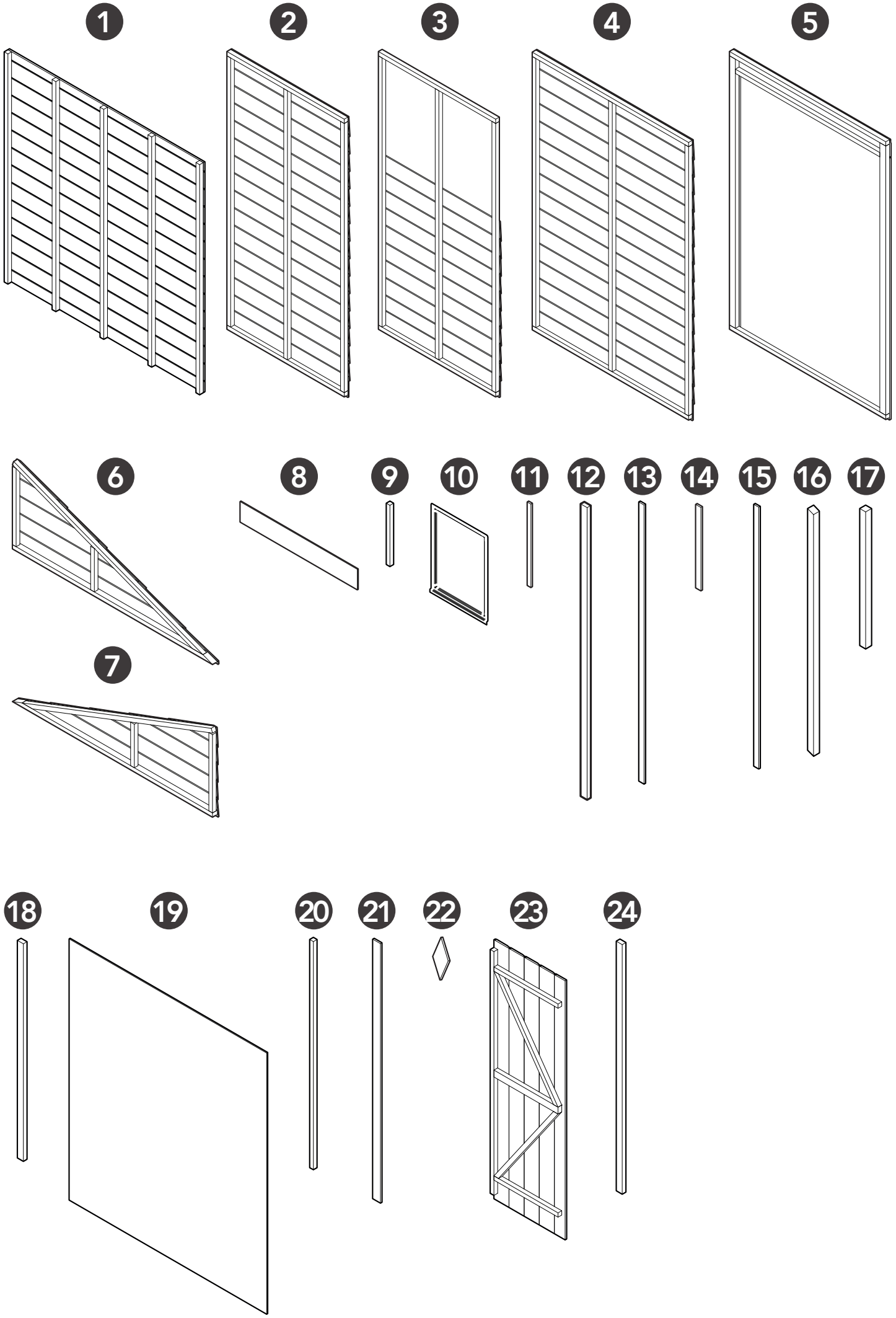
1
2
3
4
5
6
7
8
9
10
11
12
13
14
15
16
17
18
19
20
21
22
23
24