BECKWOOD

by forest

ISSUE: 0124

SHED INSTRUCTIONS

BASE KIT 2

Pent sheds with a single door & pent roof beams for roof structure

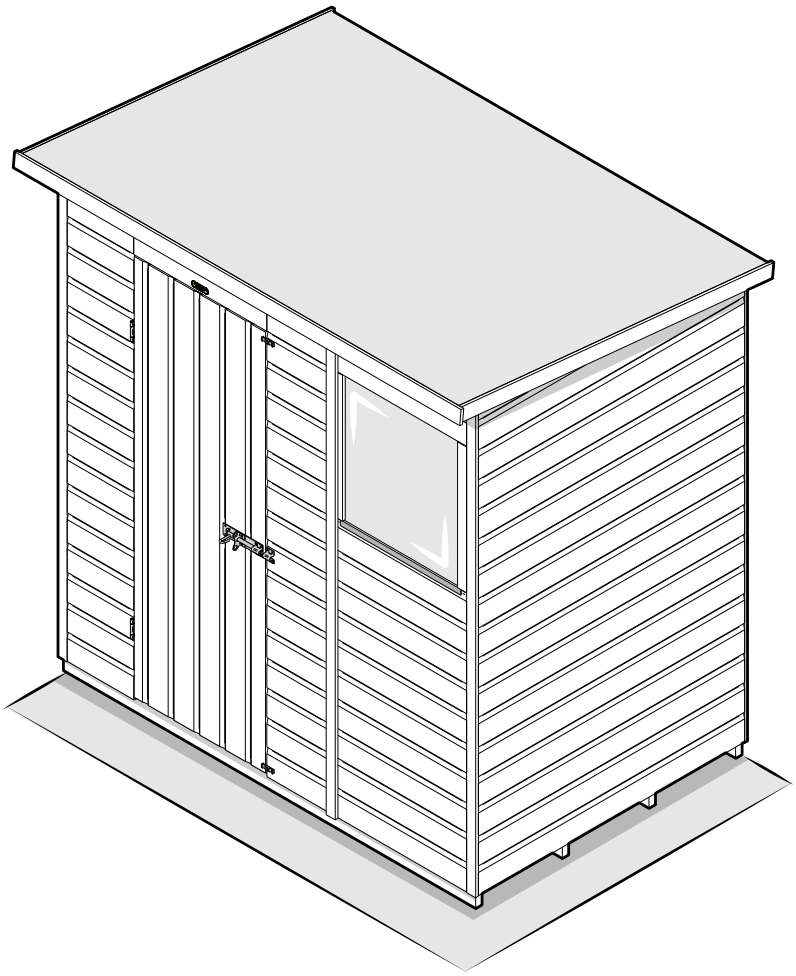

Please note these instructions are generic, any differences will be outlined in the steps.

Missing something or need more information?
Call our aftersales team on
0333 321 3142

Visit our website for spare instructions and more information
www.forestgarden.co.uk

Forest Garden, Oak Drive, Hartlebury Trading Estate, Hartlebury, Worcestershire, DY10 4JB
EU Authorised Representative: Authorised Representative Service, 77 Camden Street Lower Dublin, D02 XE80, Ireland

BEFORE YOU START..

Please read through this guide to prepare yourself before assembling your shed. We recommend that you **check all the components and fixings**. Your parts list can be found on your shed label.

All our sheds are constructed in the same way, they simply come with different components depending on the type of shed you have. We have sent you **generic fixing packs** and **generic loose item packs** to suit the shed range. You should expect there to be leftover fixings and loose items.

BASE PREPARATION

It is vital that you build your new shed on a **solid, level base.** Timber or Plastic Shed Bases are ideal, as is solid concrete or concrete slabs.

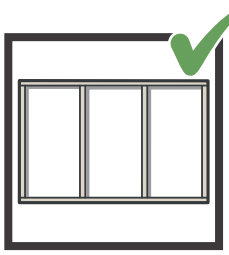

Timber Base
Self-constructed/
Buy pre-made

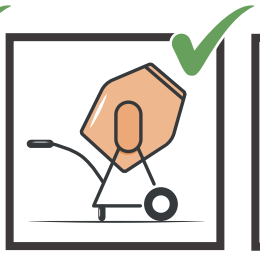

Concrete
Concrete surface/
Concrete slabs

Pro Shed Base
Interlocking
eco-friendly base

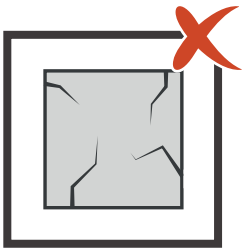

Broken Slabs/Gaps
Uneven slab sizes
with no cement

Loose Soil
A base of soil or
grass only

If you have an existing base and think it is suitable for your new shed to be sited on, it is important you check that it is level and **does not deviate by any more than 15mm** from edge to edge. If this is not the case the building will twist, causing gaps to appear in the sections and the roof, doors, and windows to misalign.

There is more information on base preparation on our website **www.forestgarden.co.uk**

TOOLS REQUIRED

We recommend using the following tools **(not supplied)**:

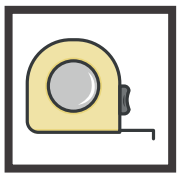

Tape Measure

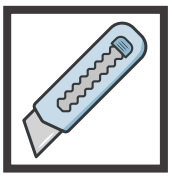

Sharp Knife & Scissors

PZ2 Pozidriv & Flat Head Screwdriver

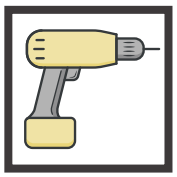

Drill & 2-6mm Drill Bits

Hammer/ Rubber Mallet

Fit For Purpose Ladder

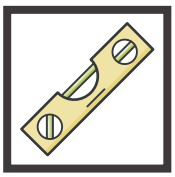

Spirit Level

We recommend getting everything aligned properly before screwing together and that the **screw holes are pre-drilled** at this stage to **avoid splitting the timber.** We do not provide pre-drilled holes due to the nature of expanding and shrinking timber, which can cause pre-drilled holes to misalign.

IMPORTANT
Assembly requires 2+ adults.

REMINDER
Always pre-drill before screwing.

PLEASE KEEP PLASTIC BAGS AND SMALL PARTS AWAY FROM BABIES AND CHILDREN.
TO AVOID DANGER OF SUFFOCATION, PLEASE KEEP THE PROTECTIVE FILM AWAY FROM BABIES AND CHILDREN.
CHECK AND TIGHTEN ALL THE FIXINGS APPLIED TO THIS PRODUCT ON A REGULAR BASIS.

CARE & ATTENTION

To help you get the most out of our products it is useful to know a little more about the properties of timber, what is normal and how your shed may behave as the seasons change. Wood is an extremely durable material for construction but as a natural product when used outdoors it is susceptible to changes in the environment.

THINGS THAT YOU MIGHT SEE IN YOUR PRODUCT

Movement, Twisting & Warping

Wood contains a natural level of moisture so decreasing humidity levels in the surrounding air may cause panels to change their shape as the porous fibres shrink. This can be exaggerated during prolonged periods of dry weather. Movement and gaps in timber products are normal, in most cases the wood will revert to its original form once the high temperatures subside and there is more moisture content in the air. Similarly, in the winter months, the opposite may occur with wood swelling.

Expansion, Contraction, Splits & Cracks

All timber will expand and contract according to its environment. As a result of this expansion and contraction, it is very common to see splits and cracks developing in the wood. Splits are common during the spring and summer months as the wood begins to dry out. The outer surface dries first and contracts, contracting over a still expanded core of the wood. The result of this is that splits and cracks appear along the grain of wood. These splits are not a fault and do not affect the structural integrity of a product.

Mould & Blue Stain

Mould is a surface-dwelling fungus that feeds on the nutrients and debris contained in the surface cells of timber. The most common problems associated with mould are discoloured timber and an increase in permeability of the timber. Blue stain is part of the same family but penetrates deeper into the surface layers of the timber. It stains the timber a dark blue, whereas mould is usually black. These do not cause the timber to rot. Keep the building well ventilated to avoid mould.

Advice On Felt Handling & Usage

Roofing felt is flexible at temperatures above 5°C. In cold temperatures extra care must be taken when handling and installing to prevent cracking and damage to the felt. The felt should not be rolled, folded, or used in temperatures lower than 5° C. In cold temperatures the felt should be stored above 10°C (indoors) for 24 hours prior to use. Felt must be lifted, not dragged, and should be stored on its end on a dry surface. **Please contact our aftersales team if you are missing your felt.**

8 TOP TIPS TO ENSURE YOUR SHED IS FULLY WATERPROOF

1. **POSITION YOUR SHED IN THE BEST LOCATION IN YOUR GARDEN**
   Avoid areas where water pools and which are constantly wet. Position away from trees and cut back any overhanging foliage which can cause moisture to be trapped against the walls and debris to collect on the roof.

2. **RAISE YOUR SHED OFF THE GROUND**
   Ideally, any concrete base should be the same footprint as the shed to allow surface water to run off without pooling. A timber base can also be used. Raise your shed 50mm above ground level.

3. **SEAL THE BEARERS**
   If using a wooden base, we recommend treating it with a treatment containing wax or oil. Also coat the bearers that meet the ground to prevent moisture rising.

4. **USE AN END GRAIN PROTECTOR**
   To protect the corners and panel joins, an end grain protector can be applied.

5. **SEAL THE PANELS & WINDOWS**
   Use a flexible silicone sealant around windows to prevent water ingress. This can also be used where two sections of the shed join together. Apply internally.

6. **CONSIDER ADDING GUTTERS**
   Adding guttering around the fascia of the shed will redirect rainwater away from the shed's foundation.

7. **KEEP VENTILATED**
   Good airflow around the perimeter of the shed and regular ventilation inside the shed will help prevent mould and mildew.

8. **CONSIDER A WATER SEALANT**
   You may want to consider painting your shed with a water sealant at least once a year. This will help reduce the risk of water ingress. We would recommend using 'Bostik Cementone Water Seal' of which can be purchased from multiple DIY stores.

HEALTH & SAFETY

We strongly recommend that PPE (Personal Protective Equipment) is used throughout your build to ensure you are protected from any potential health and safety risks. **Do not exempt yourself from wearing PPE.**

Cut-Resistant Gloves

Protective Glasses

Protective Boots

Protective Mask

Working At Height

THE ROOF OF THIS BUILDING IS NOT A LOAD BEARING STRUCTURE.

The components provided may be heavy. Please lift with caution and with a minimum of 2 people.
Please carefully unpack your shed and loose components as they may have moved during transportation.

TREATMENT INFORMATION

The treatment applied to your shed is to ensure longevity and protection against fungal decay and rot.
This may leave colour variations, but these will even out as the moisture content stabilises.

Pressure Treatment
Pressure treatment is to provide protection against rot
Pressure treated sheds do not need to be re-treated every year
25 year guarantee

Use the 'waterproofing top tips' to increase the longevity of your shed.
See our website for more information at **www.forestgarden.co.uk /guide-to-our-products/**

Treated timber contains biocidal products for control of wood destroying organisms.
Active Ingredients - Basic Copper Carbonate, DDA Carbonate, DDA Chloride.

- Wear gloves when handling.
- Avoid inhalation of sawdust.
- Do not use in contact with drinking water or food.
- Do not use for animal bedding or in fish ponds.
- Dispose of treated wood responsibly.
- Treated products cannot be recycled as the wood is no longer in its original virgin state.
- Once the treatment has dried there is no risk of toxic contamination. The risk would come from the treatment before it is added to our products.

DISCLAIMER

Check you have all your parts prior to assembly.

Timber is a natural material of which will shrink and swell because of varying moisture content.

Assembly of damaged parts may be deemed to be acceptance, and this may affect the remedies you are entitled to.

If the product is not constructed in accordance with the instructions, or is altered in anyway (e.g. painted), the manufacturer cannot be held liable for any resulting damage.

If you are organising a third party to install your shed, it is best not to schedule this immediately on receipt of your order, to give you time to check your delivery.

IDENTIFY YOUR CHOSEN SHED

From the **floor plans** below, identify your shed based on the **width, depth** and **roof type** provided.
You will need this to identify the side panel positions before assembling your shed. **Use the key as a guide.**

KEY

- **A** – **1ft Panel (295 x 1831mm)**
- **B** – **2ft Panel (590 x 1831mm)** **(With & without windows)**
- **C** – **3ft Panel (885 x 1831mm)** **(With & without windows)**
- **D** – **4ft Panel (1180 x 1831mm)** **(With & without windows)**
- **E** – **3ft Door Panel (885 x 1831mm)**

PLEASE NOTE

Same size panels are interchangeable.
Hinge your single door onto either side.

INFILL PANELS

These sheds and most of the single door sheds will have 'Infill Panels' of which are secured to the top of the Side Panels. They will be the same width as the panel or door opening beneath. They are used to increase the height of the panels to create the angled roof and to finish the single door panel. Lay these out with your Side Panels around your shed floor(s) for preparation. **Follow the assembly steps for more details.**

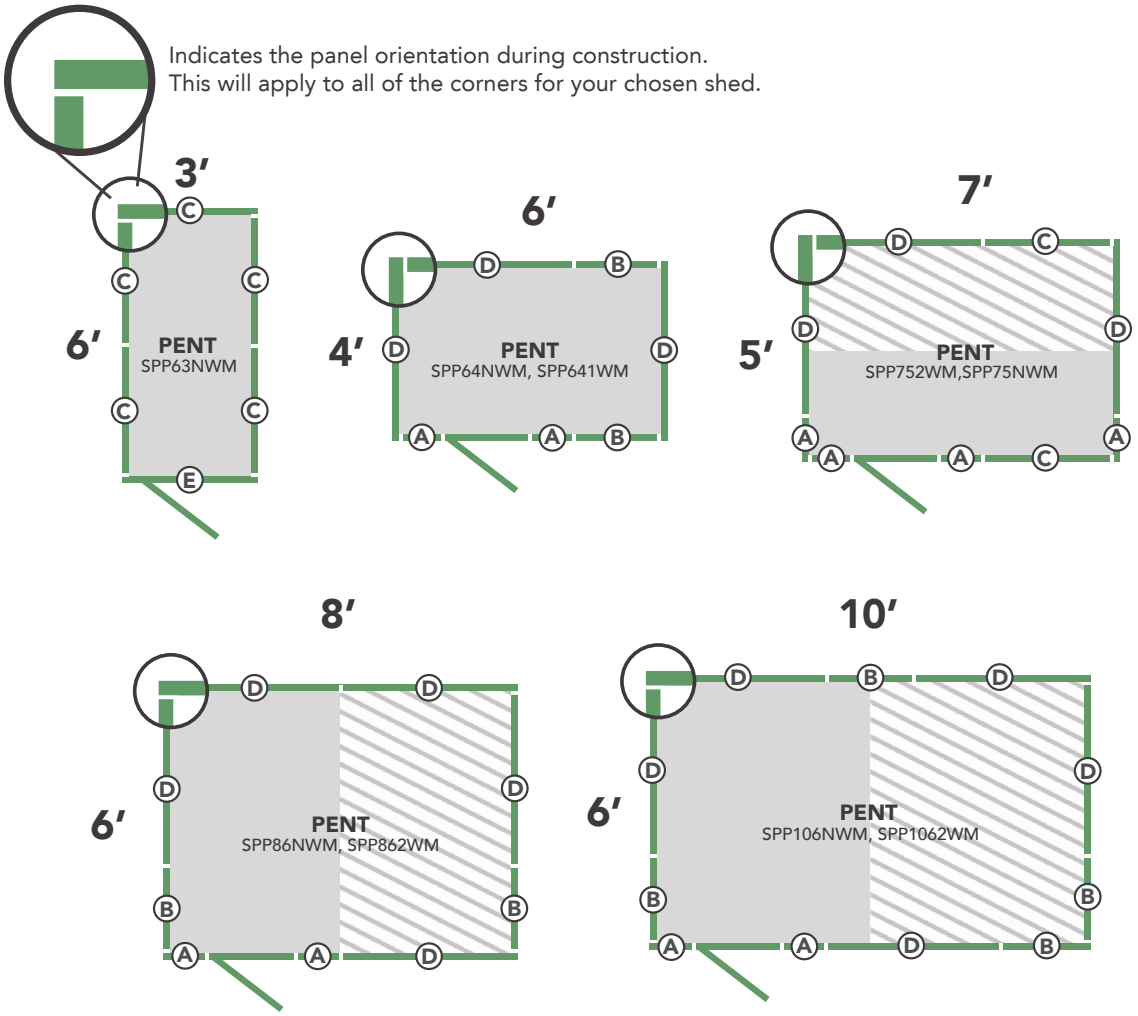

FIXING PACKS

We have provided **several fixing packs** for your build. Each fixing pack will contain fixings for each step of the assembly.
These fixing packs are generic, to suit the modular shed range. Visuals in each of the **steps are for reference only** and may slightly vary depending on the shed you have chosen. Any major differences will be outlined in the steps. We have designed them to be as simple as possible to follow, but **if you have any issues, please contact our aftersales team. Check your parts list prior to assembly,** of which can be found on your shed label.

FLOOR ASSEMBLY

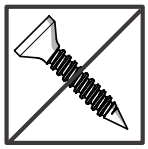

THERE ARE NO FIXINGS FOR THIS SECTION.
Look through the different visuals and follow the step that suits your chosen shed.

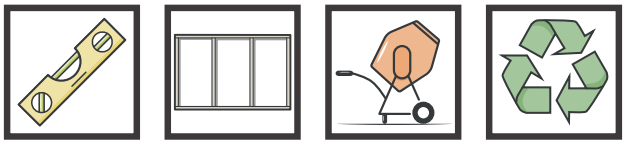

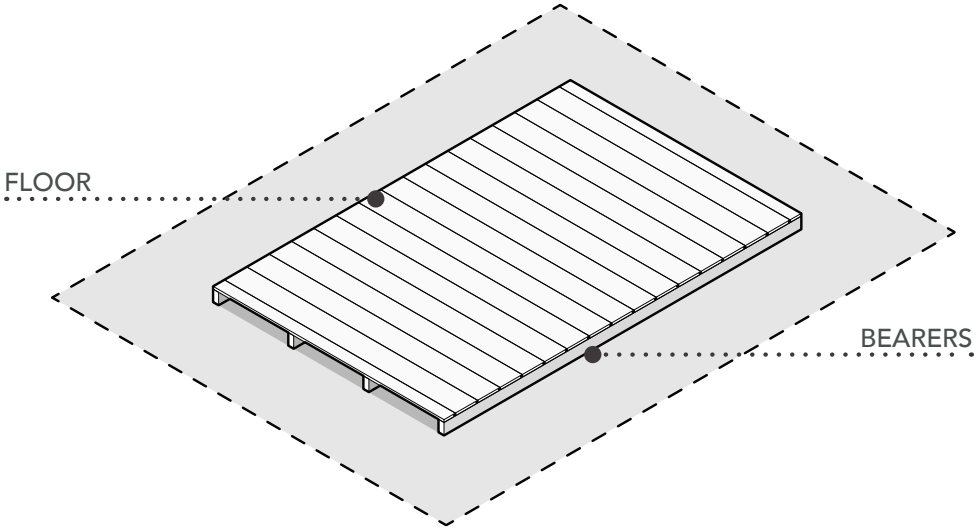

Before assembly, **your Floor must be firm and level** to ensure the shed lines up and is assembled properly. We recommend that there should be **access to all sides of your shed for assembly and any maintenance.**

STEP 1: POSITION FLOOR(S)

Due to the health and safety concerns of the Floor weights, we **do not** advise to secure the floors together. If you wish to secure the floors together, you do so at your own risk.

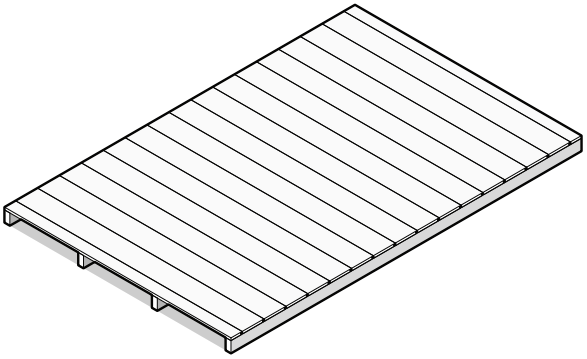

SINGLE FLOOR

Position the Floor in your desired location.

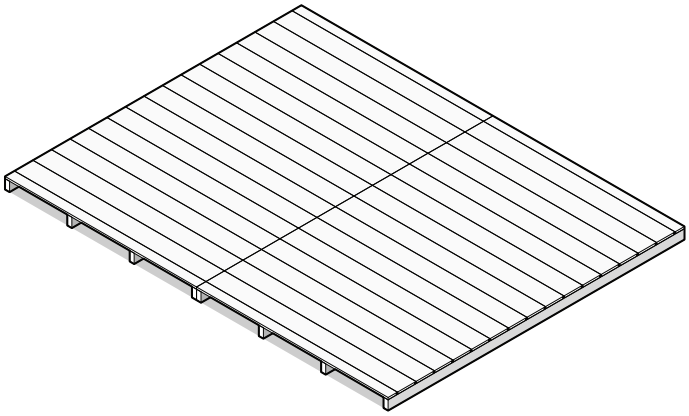

DOUBLE FLOOR

Position the Floors in your desired location. **Butt the Floor bearers together** and ensure they are flush on each side. The **bearers** will be butted together **along their side face** as shown above.

WINDOW ASSEMBLY

(PLEASE SKIP THIS SECTION IF YOUR SHED HAS NO WINDOWS)

FIXING PACK CONTAINS:

FIXING PACK CODE: *SHEDWINFP*

You may receive more than one of the same fixing pack to provide enough fixings for the sheds with more windows.

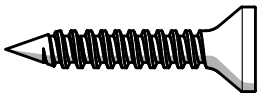

3.5 x **30mm** Screws
QTY: **14**

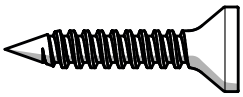

3.5 x **25mm** Screws
QTY: **16**

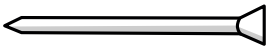

1.6 x **30mm** Nails
QTY: **8**

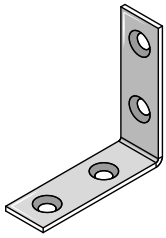

L-Brackets (50mm)
QTY: **4**

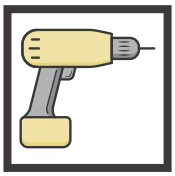

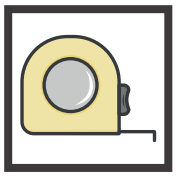

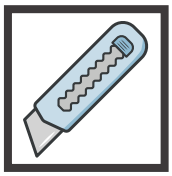

STEP 1: WINDOW SILL ASSEMBLY

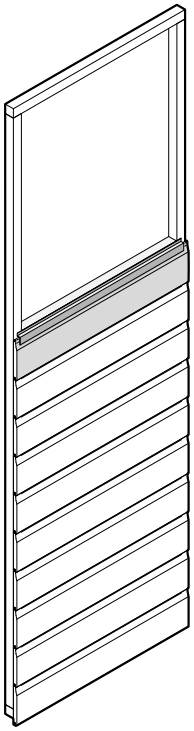

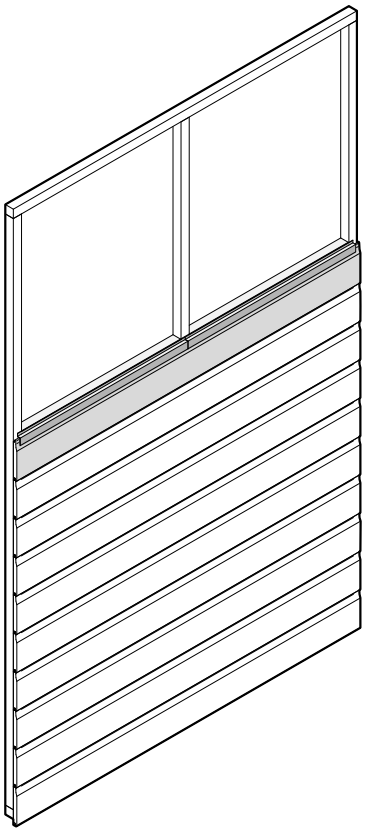

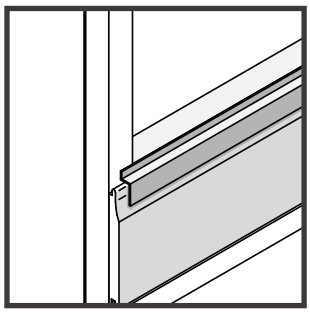

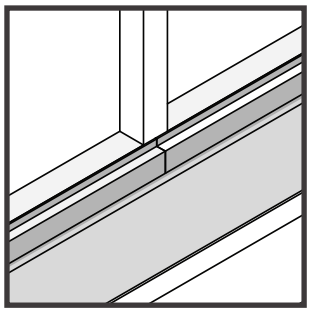

TRIM & POSITION YOUR Z-STRIP(S)

Place the Z-Strip on top of the board in the window opening. **Mark out and trim the Z-Strip to the required size.**
Ensure the Z-Strip sits across the window opening framework as shown above.

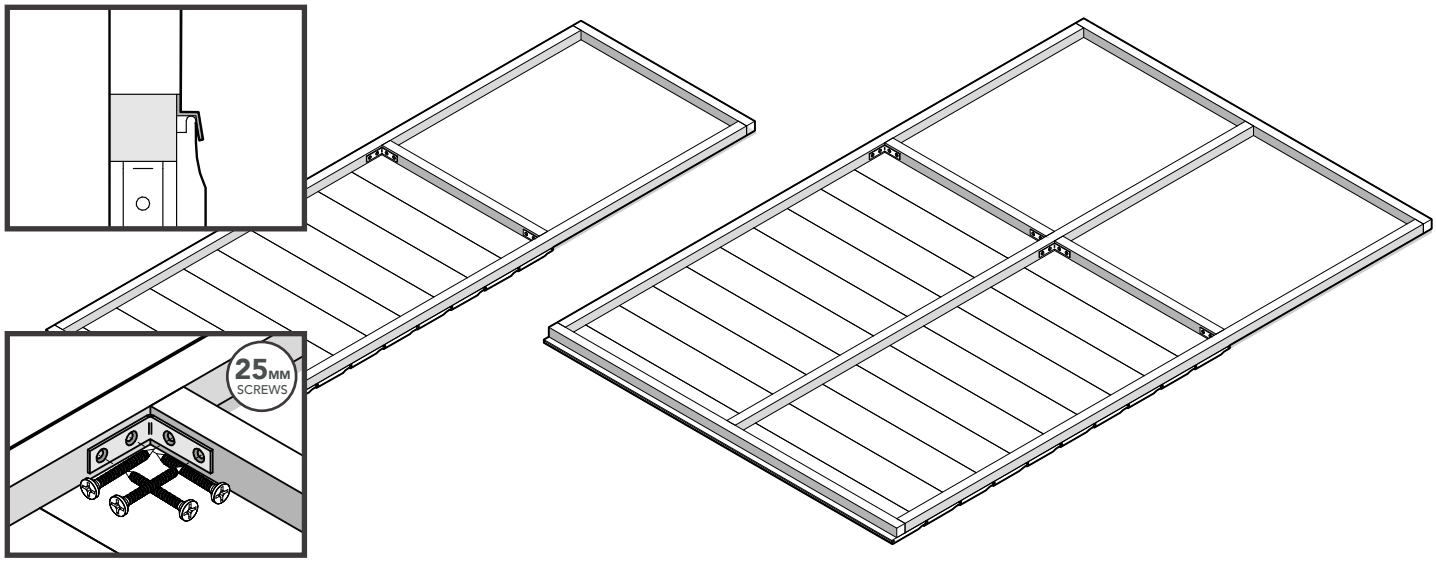

WINDOW SILL(S)

Using the positioned Z-Strip(s), position the Window Sill(s) flush to the top of the Z-Strip. **Secure the Window Sill(s) using the L-Brackets to the Window Panel framework. Use 2 x L-Brackets per Window Sill.**

2ft Window panel window sill size (28x28x534mm), 3ft Window panel window sill size (28x28x400mm), 4ft Window panel window sill size (28x28x548mm)

STEP 2: SECURING THE TOP BOARD

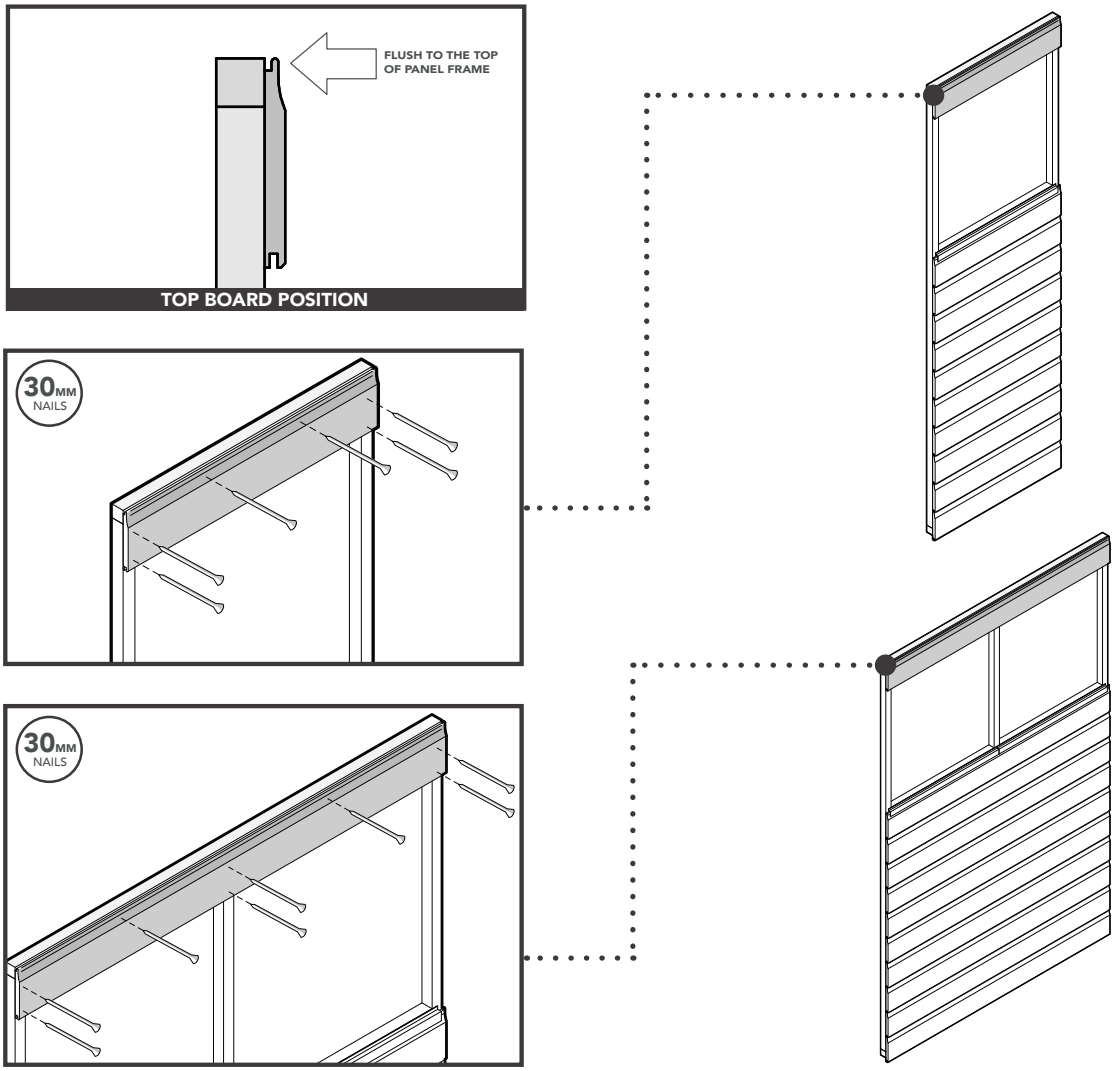

SECURE TOP BOARD

Position the Top Board to the top of the Window Panel framework, ensuring it is flush as shown above. Secure the Top Board to the Window Panel framework behind with the nails provided.

STEP 3: WINDOW ASSEMBLY

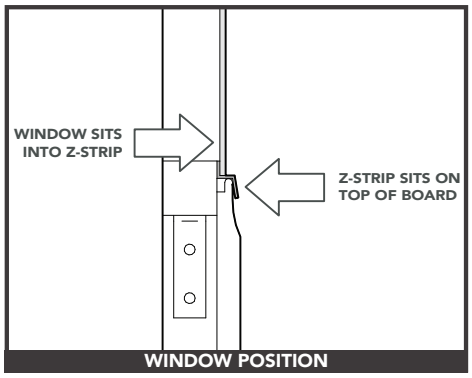

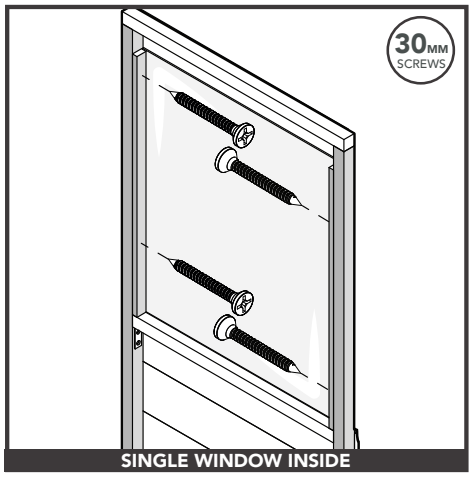

WINDOW & INTERIOR WINDOW STRIPS

Position the Window onto the Z-Strip from the outside of your Window Panel. The **Window will be placed up against the Top Board** on the inside of your Window Panel. Peel your protective film off the Window. **Position and secure the Interior Window Strips whilst positioning the Window** to ensure the Window is secured in place. Repeat the process for multiple Windows.

Interior window strip size (24x12x600mm)

STEP 4: WINDOW COVER STRIPS

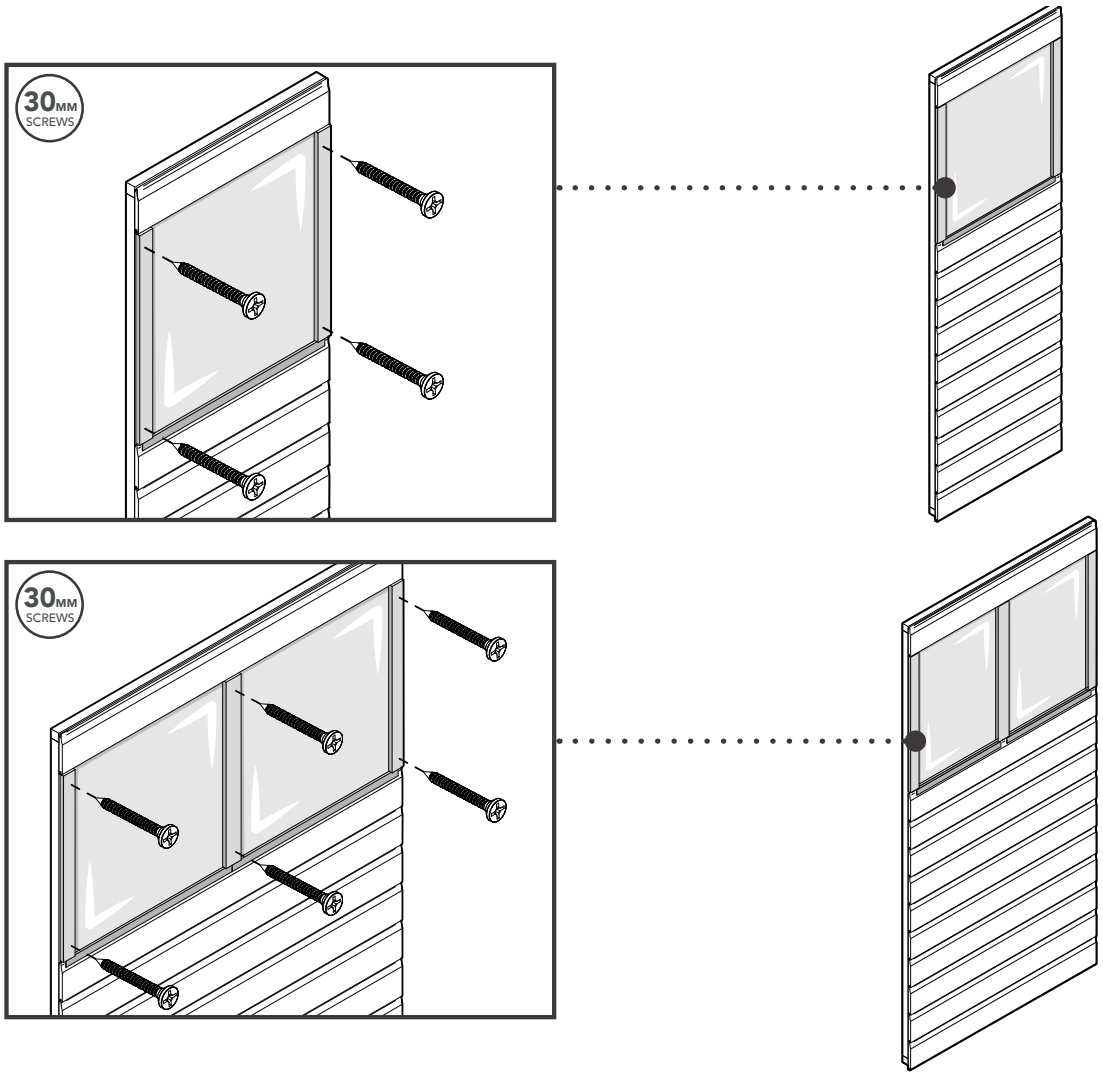

SECURE WINDOW COVER STRIPS

Position and secure the Window Cover Strips to the Window Panel framework. The double Window Panel will have a wider cover strip for the centre of the Window Panel as shown above. These will further hold the Window(s) in place.

SIDE PANEL ASSEMBLY

FIXING PACK CONTAINS:

FIXING PACK CODE: *SHEDPANELSFP*

You may receive more than one of the same fixing pack to provide enough screws for the larger shed sizes.

5 x **60mm** Screws
QTY: **3**

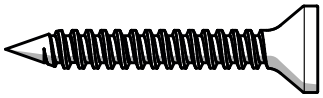

4 x **50mm** Screws
QTY: **52**

4 x **40mm** Screws
QTY: **2**

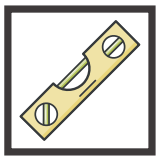

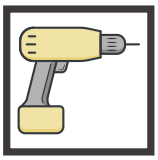

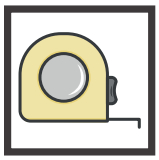

STEP 1: SIDE PANEL ASSEMBLY

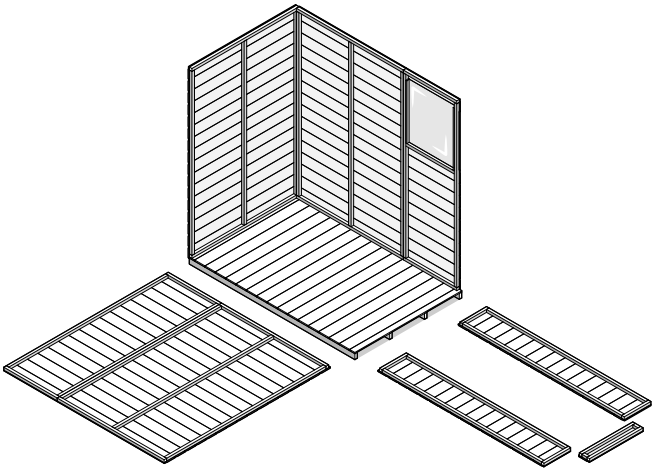

LAY OUT YOUR PANELS

Lay out the panels around your shed Floor(s) to your desired panel configuration. Use your **floor plan** to confirm panel positions.

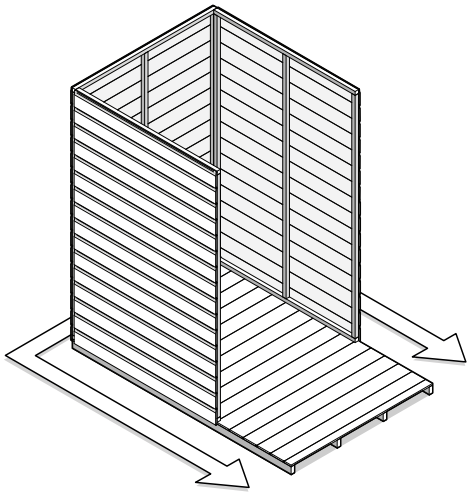

WORK FROM BACK TO FRONT

We recommend starting in a back corner and then **work from the back panels to the front panels for assembly.**

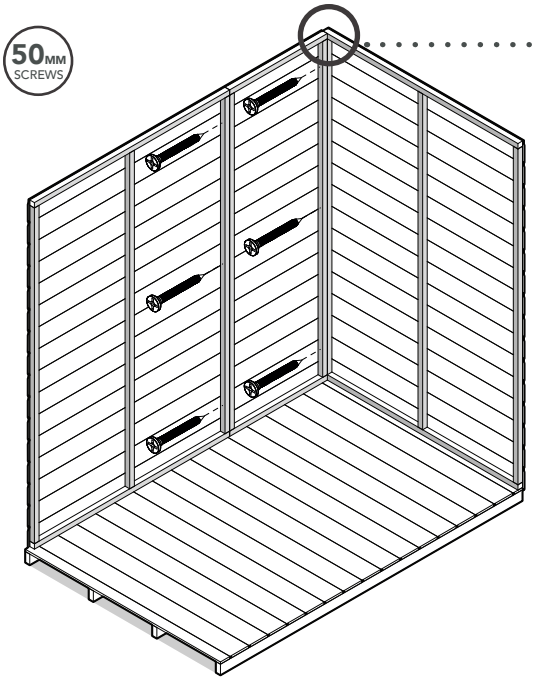

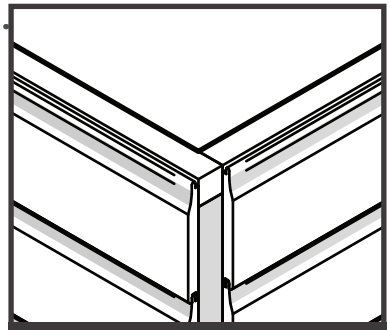

EXTERNAL PANEL CORNERS

Ensure when butting the panels together in a corner, they are flush to the framework. The space next to the boards is for the Cover Strip to sit into.

SECURE PANELS TOGETHER

Use your floor plan to confirm the corner panel positions. **Position and secure the Side Panels together.** Ensure the bottom batten on the Side Panels sit on the Floor and the bottom board is up against the Floor edge.

STEP 2: SECURE SIDE PANELS TO FLOOR(S)

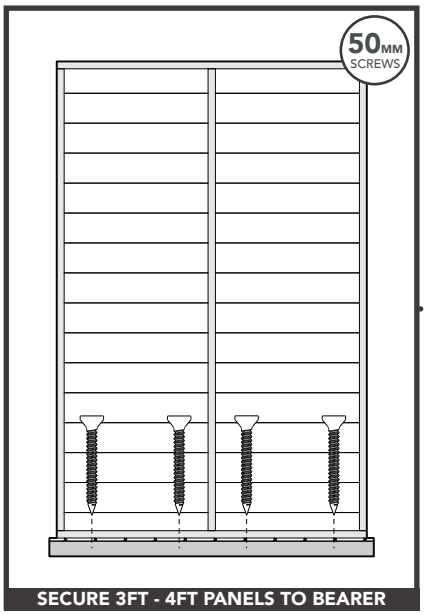

SECURE 3FT - 4FT PANELS TO BEARER

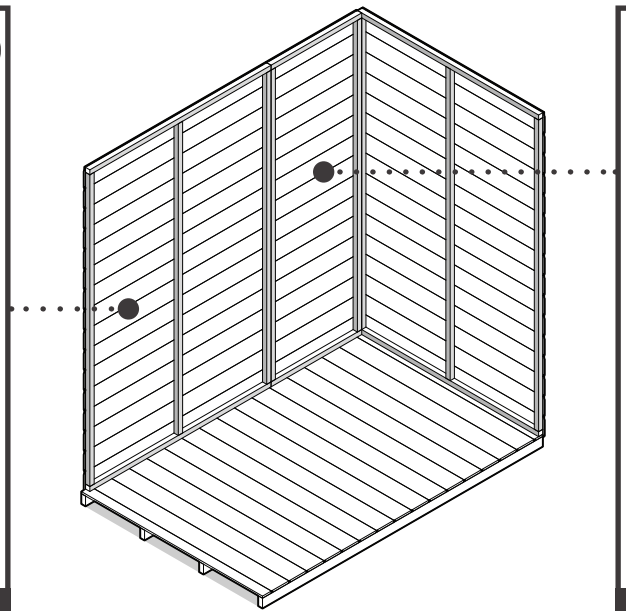

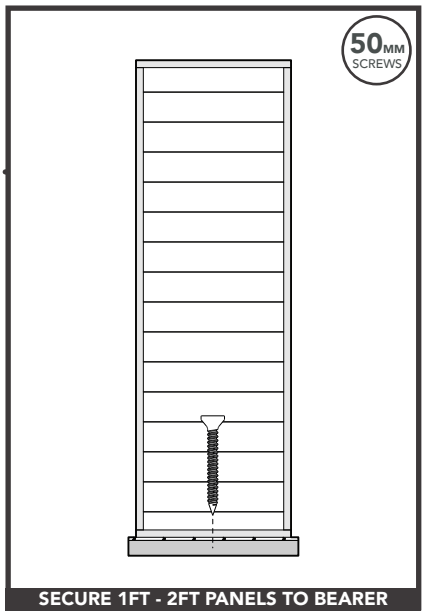

SECURE 1FT - 2FT PANELS TO BEARER

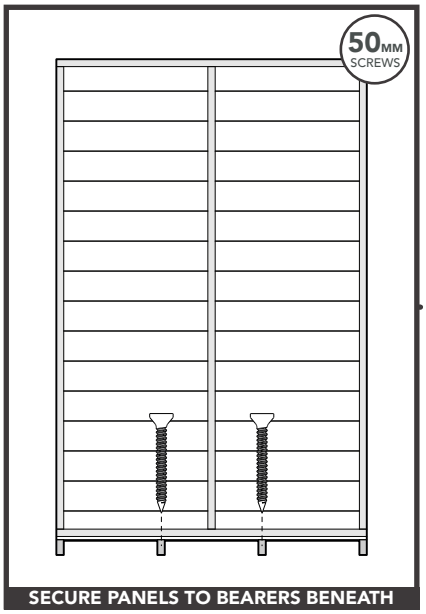

SECURE PANELS TO BEARERS BENEATH

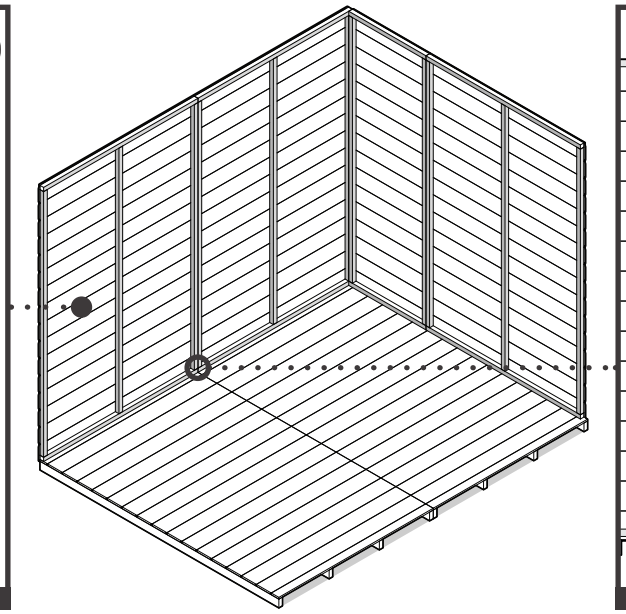

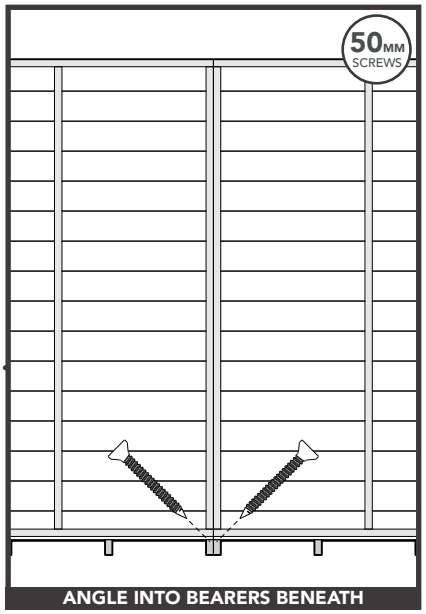

ANGLE INTO BEARERS BENEATH

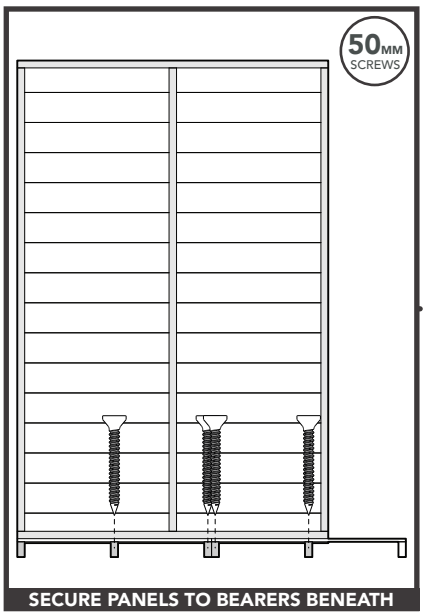

SECURE PANELS TO BEARERS BENEATH

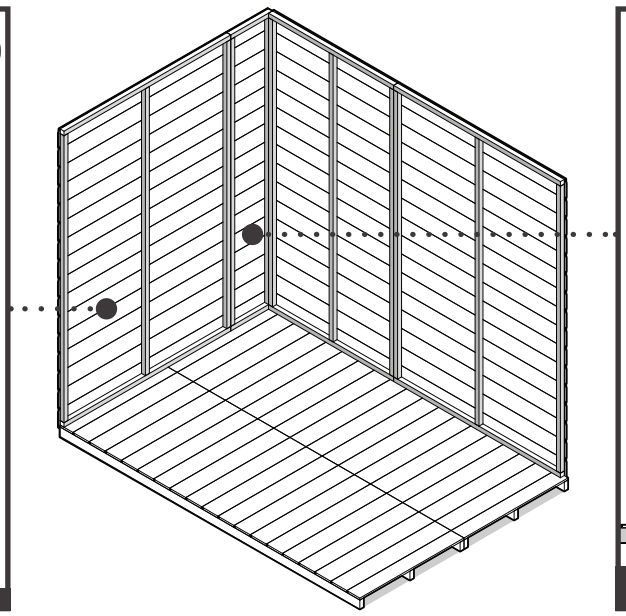

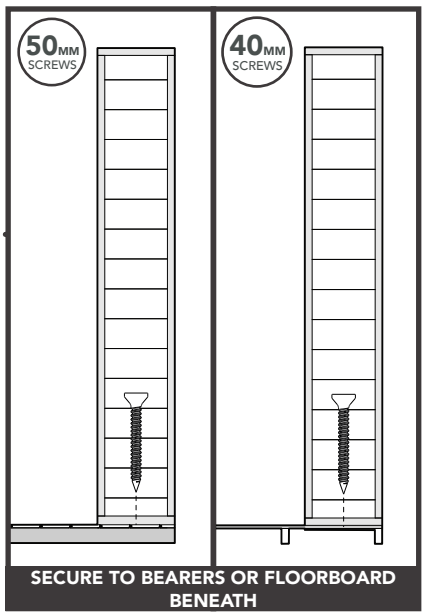

SECURE TO BEARERS OR FLOORBOARD BENEATH

SECURE TO FLOOR BEARERS/FLOORBOARD BENEATH

Secure the Side Panels to the Floor(s) by **screwing into the floor bearers beneath** (50mm screws).
Secure the Side Panels to the floorboards if there are no bearers beneath (40mm screws).

STEP 3: SECURE DOOR PANEL TO FLOOR

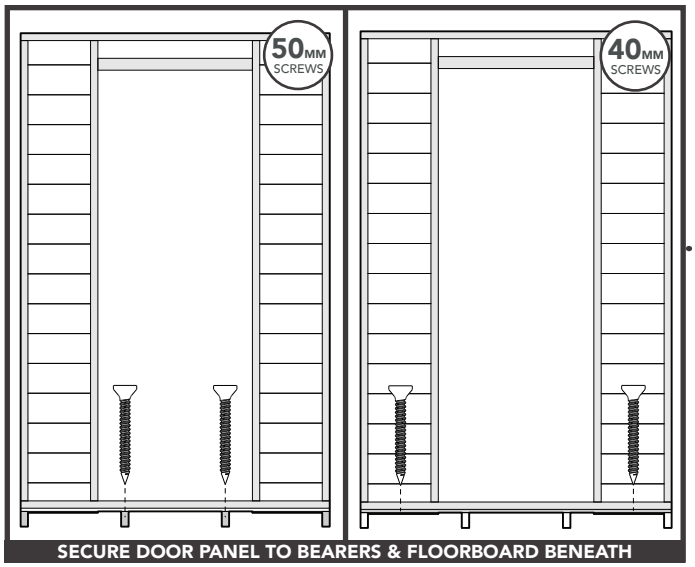

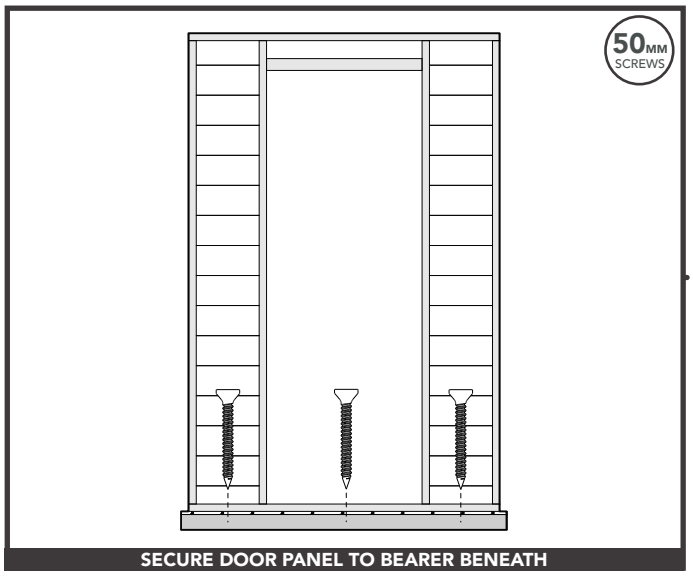

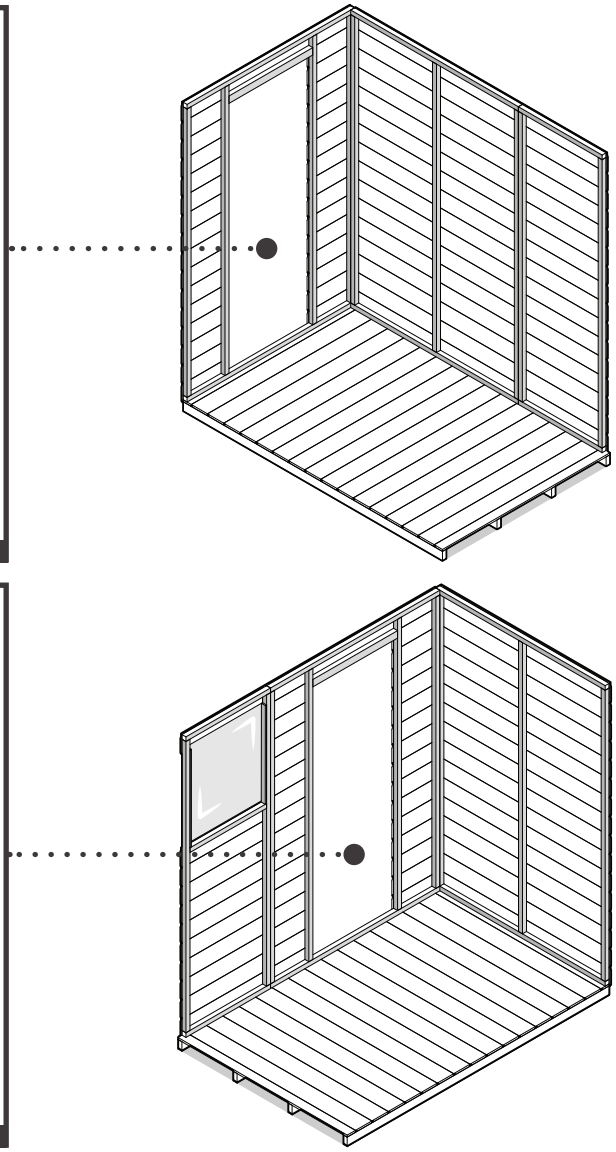

SECURE TO FLOOR BEARERS/FLOORBOARD BENEATH

Secure the Door Panel to the Floor by **screwing into the floor bearers beneath** (50mm screws).
Secure the Door Panel to the floorboards if there are no bearers beneath (40mm screws).

STEP 4: PENT INFILL PANELS

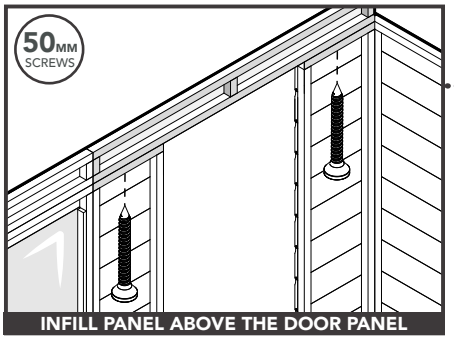

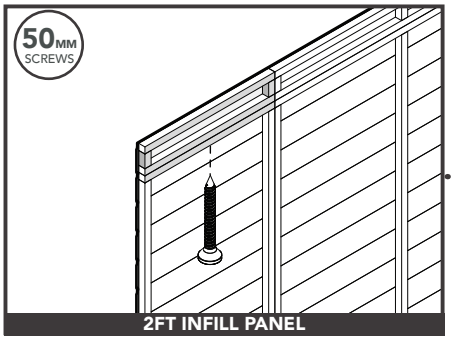

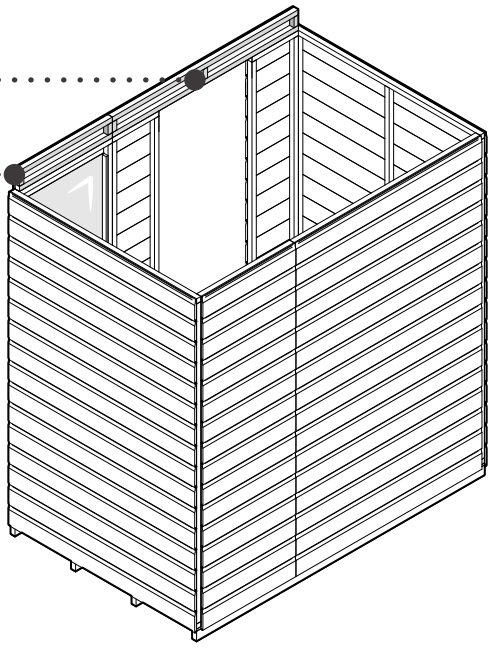

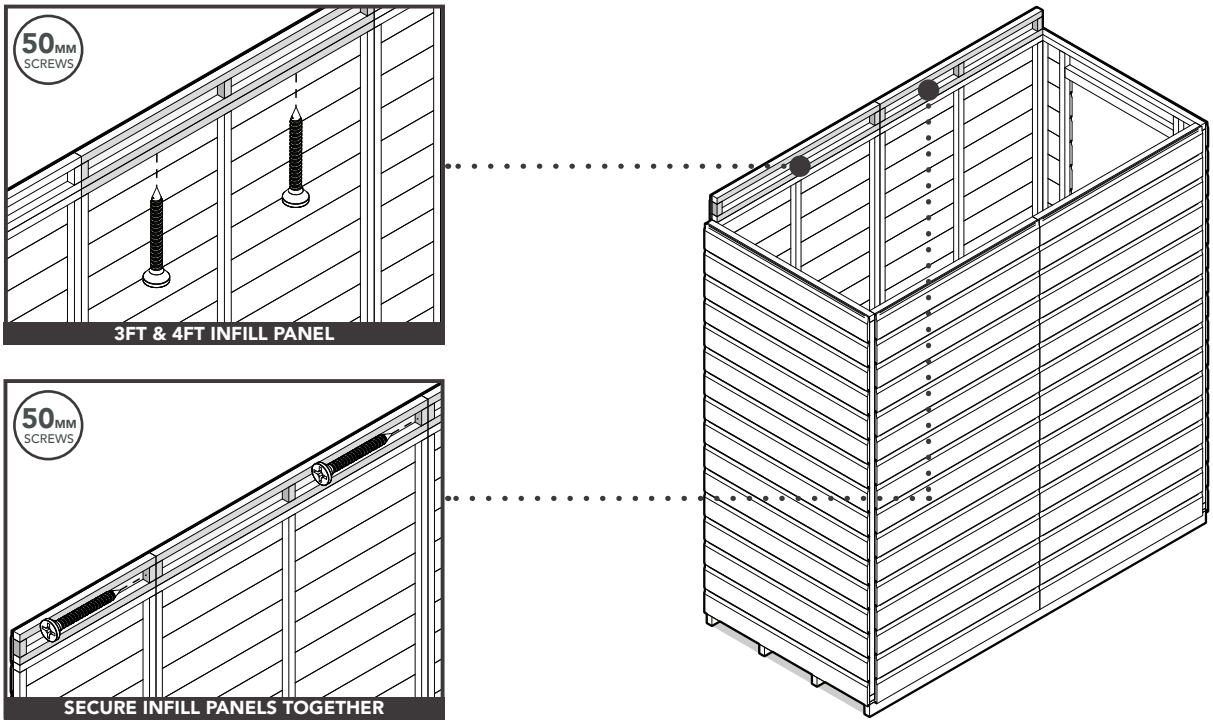

SECURE INFILL PANELS TO SIDE PANELS

Position and secure the Infill Panels to the top of the Side Panels. They will be the same width as the Side Panel beneath. The Infill Panels are for the roof angle on your pent shed. **Secure the Infill Panels together** once they are secured to the Side Panels.

STEP 5: SINGLE DOOR INFILL PANELS

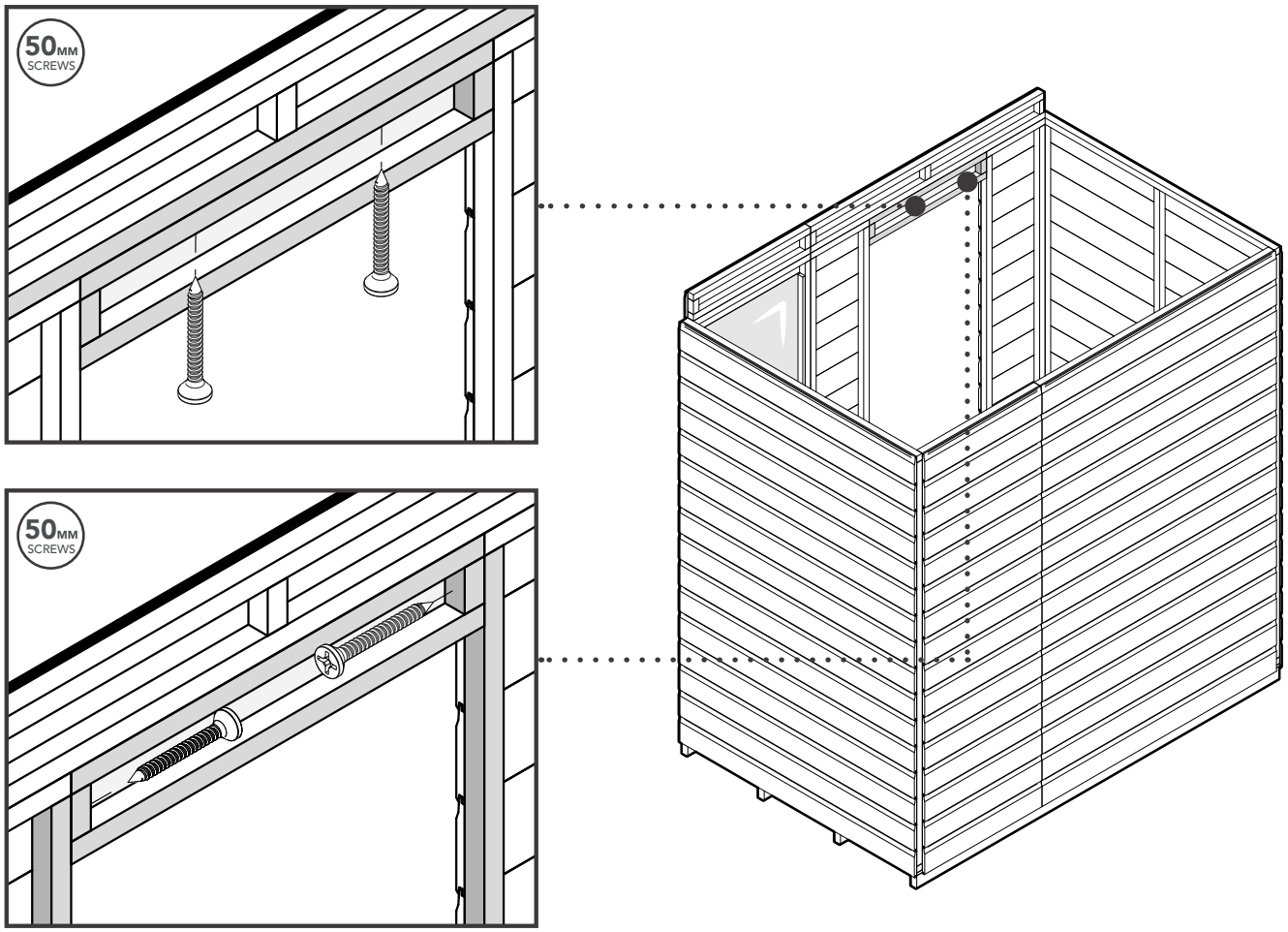

SINGLE DOOR INFILL PANELS

Position the Single Door Infill Panel into the door opening. Secure to the panels on either side and above.

PENT SECTION ASSEMBLY

FIXING PACK CONTAINS:

FIXING PACK CODE: *SHEDGABLEFP*

4 x **50mm** Screws
QTY: **8**

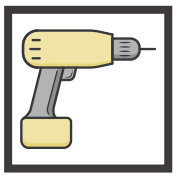

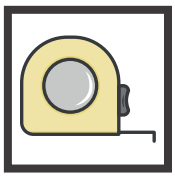

STEP 1: PENT SECTION ASSEMBLY

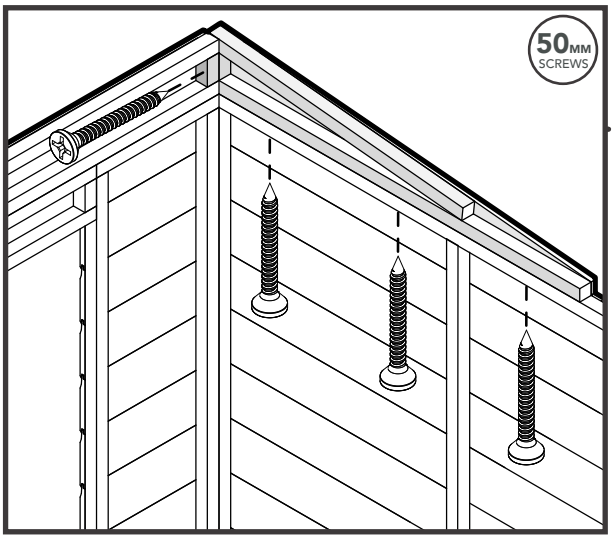

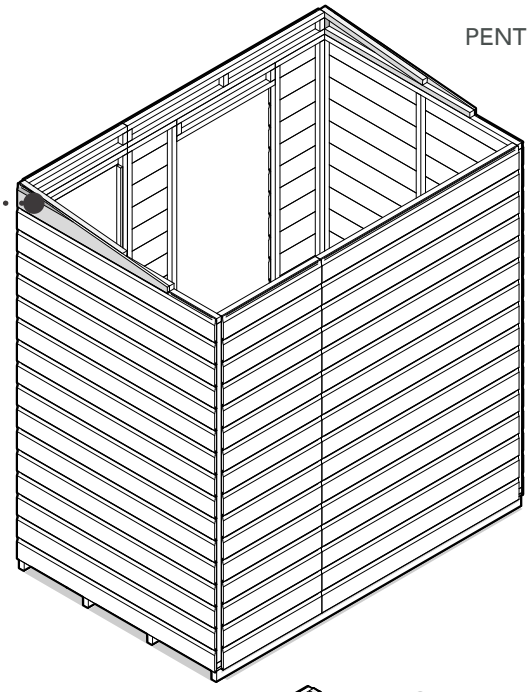

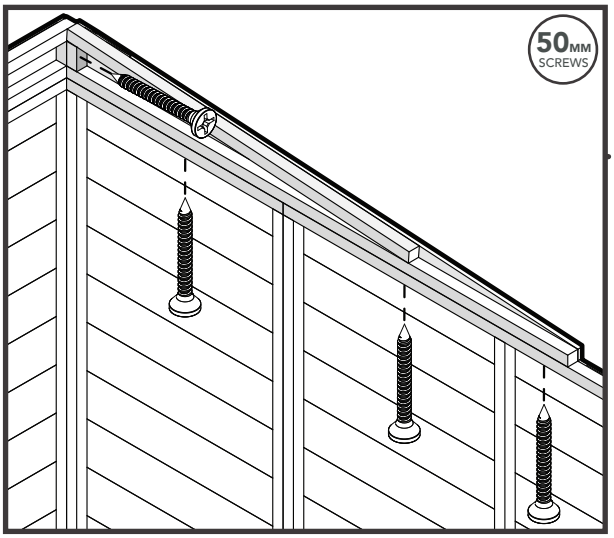

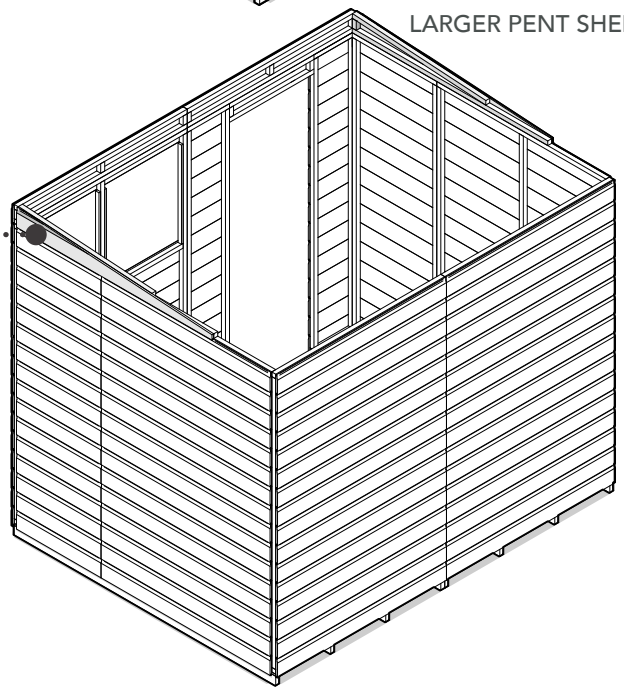

PENT SECTIONS

Position and secure the Pent Sections to the Side Panels and Infill Panels as shown above.

COVER & DOOR STRIPS

FIXING PACK CONTAINS:

FIXING PACK CODE: *SHEDSTRIPSFP*

You may receive more than one of the same fixing pack to provide enough screws for the larger shed sizes.

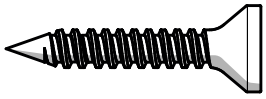

3.5 x **30mm** Screws
QTY: **33**

4 x **50mm** Screws
QTY: **4**

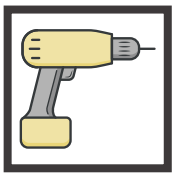

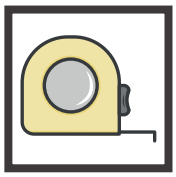

STEP 1: DOOR BATTENS

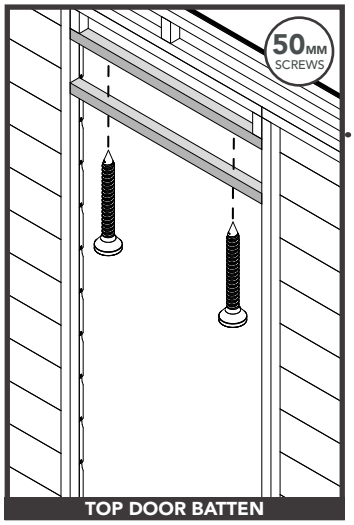

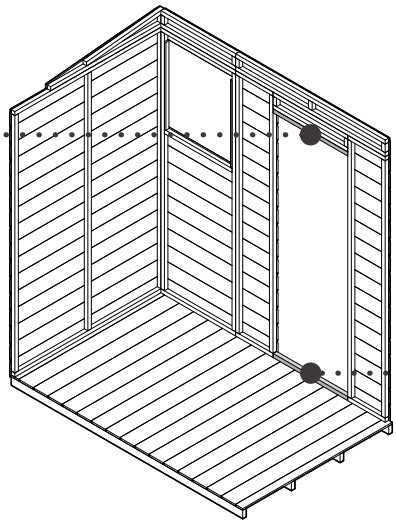

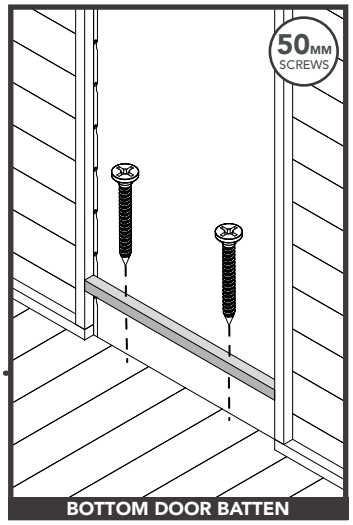

DOOR BATTENS

Secure the Door Battens to the Top and Bottom of the door opening framework. Ensure they are flush to the Panel framework and they are screwed in to the the bearers beneath.

Door Batten size (28x28x590mm) (28x28x885mm)

STEP 2: DOOR STRIPS

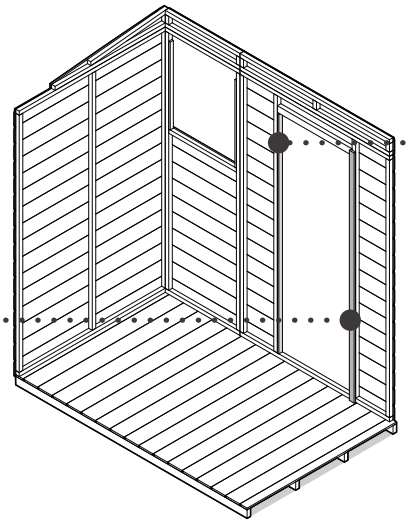

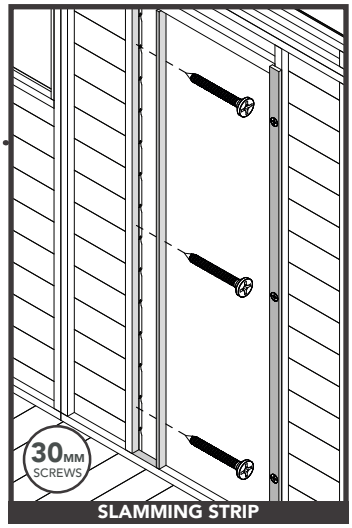

DOOR WEATHER STRIP

Secure the Door Weather Strip to the side you want the hinges, and ensure it is flush to the Floor and against the face of the panel framework. Ensure there is approximately a 10mm overhang into the door opening.

Door weather strip size (38x12x1710mm)

SLAMMING STRIP

Secure the Slamming Strip, to the Panel framework in the door opening as shown above. **This will be on the opposite side you want the hinges.**

Slamming strip size (28x12x1637mm)

STEP 3: COVER STRIPS

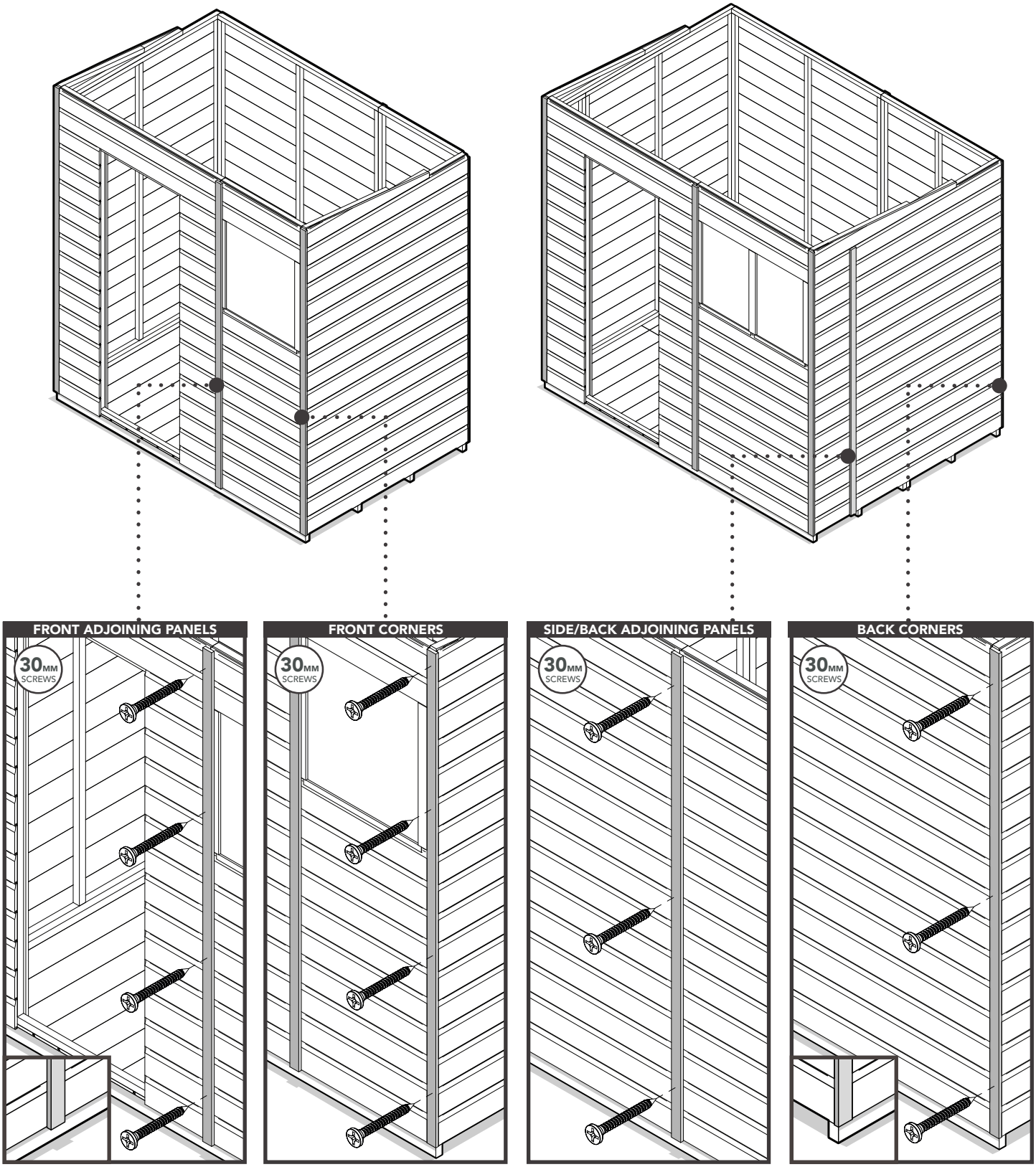

COVER STRIPS

Secure the Cover Strips to the corners and adjoining panels. Ensure they are flush to the bottom edge of the panels. Make sure to **secure the Cover Strips to the framework behind and not into the joins of the panels.** The Front Cover Strips are longer than the Side/Back Cover Strips.

Front Cover strips size (1940mm), Side/Back Cover strips size (1823mm)

PENT ROOF BEAM(S) ASSEMBLY

FIXING PACK CONTAINS:

FIXING PACK CODE: *SHEDPENTBEAMSFP*

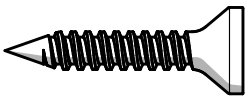

3.5 x **25mm** Screws
QTY: **8**

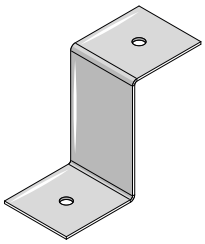

Z-Brackets (45mm)
QTY: **4**

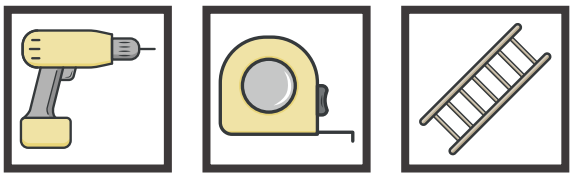

STEP 1: Z-BRACKETS PREPARATION

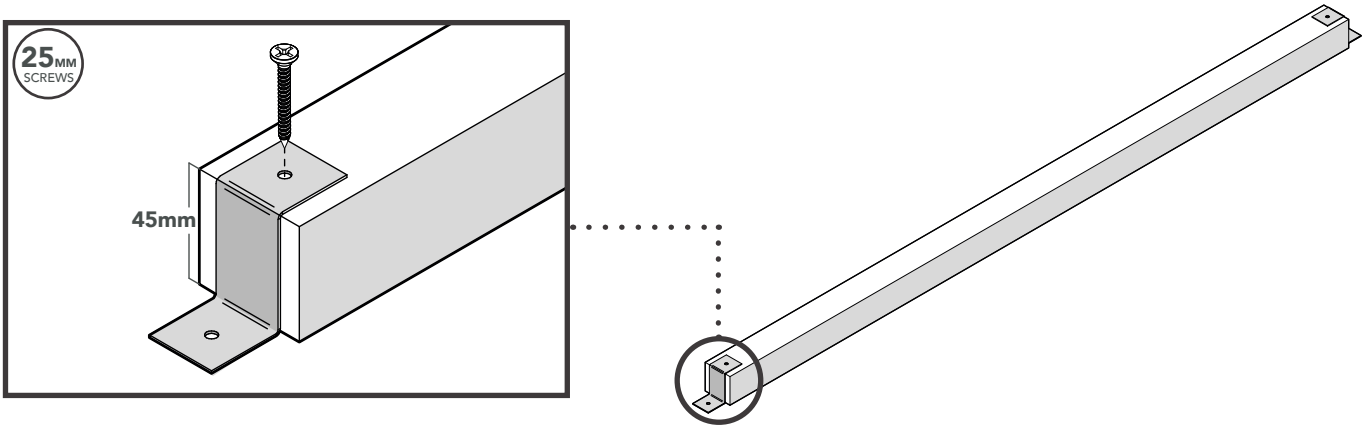

Z-BRACKETS

Position and secure the Z-brackets to both ends on your Roof Beam(s) as shown above.
The Roof Beam should be flush to the Z-bracket.

STEP 2: ROOF BEAM(S) ASSEMBLY

SINGLE ROOF BEAM

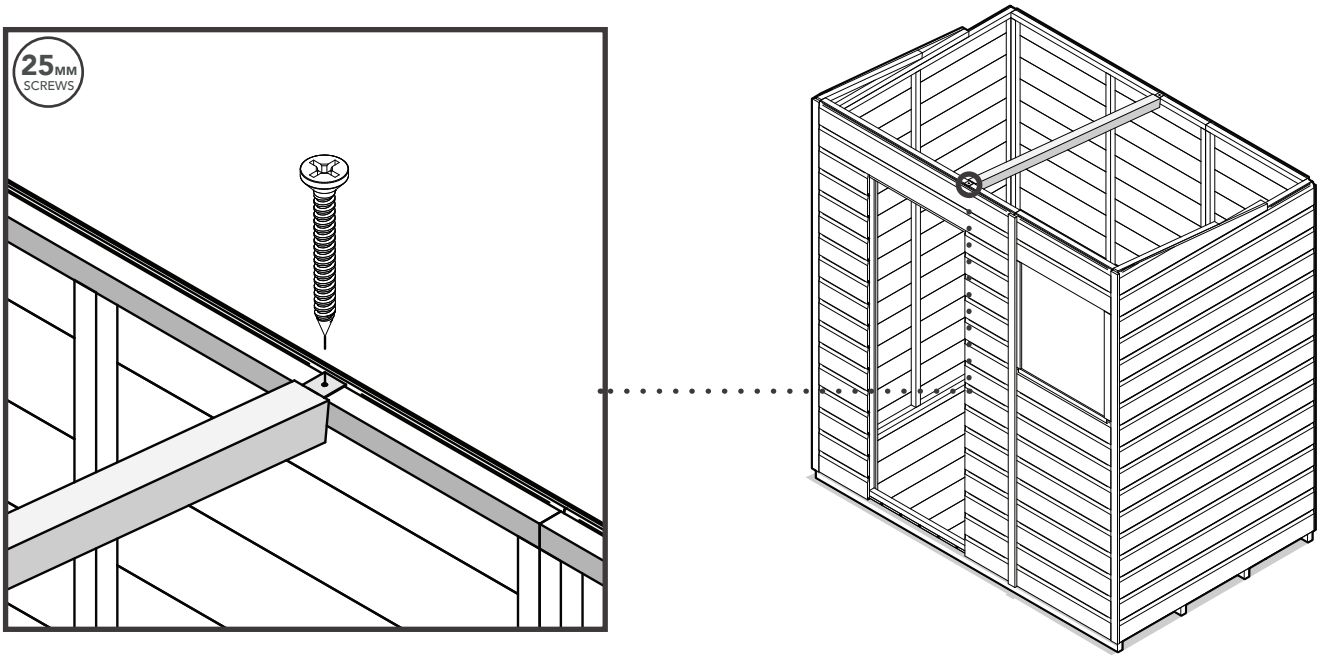

SINGLE ROOF BEAM (6x3)

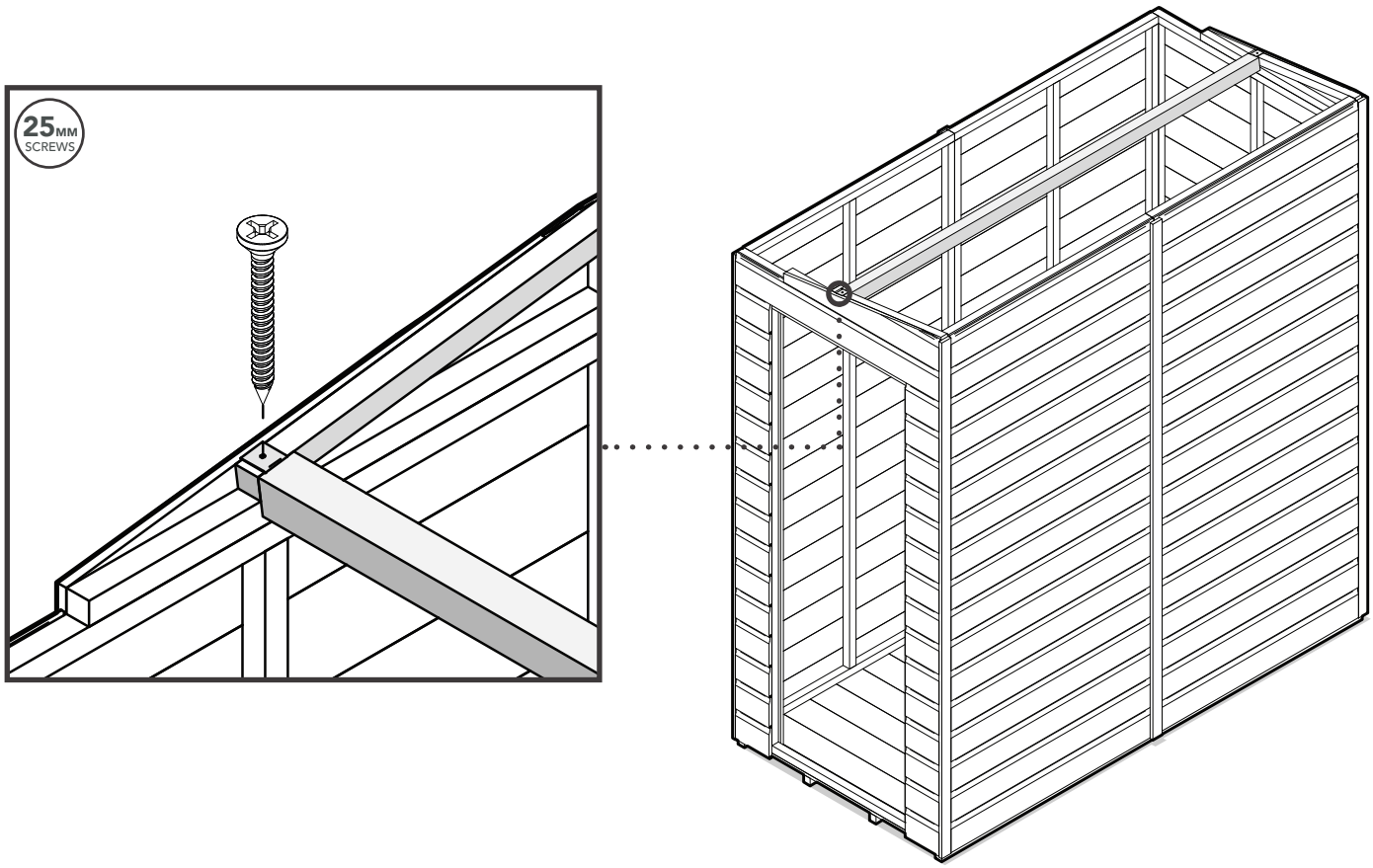

TWO ROOF BEAMS

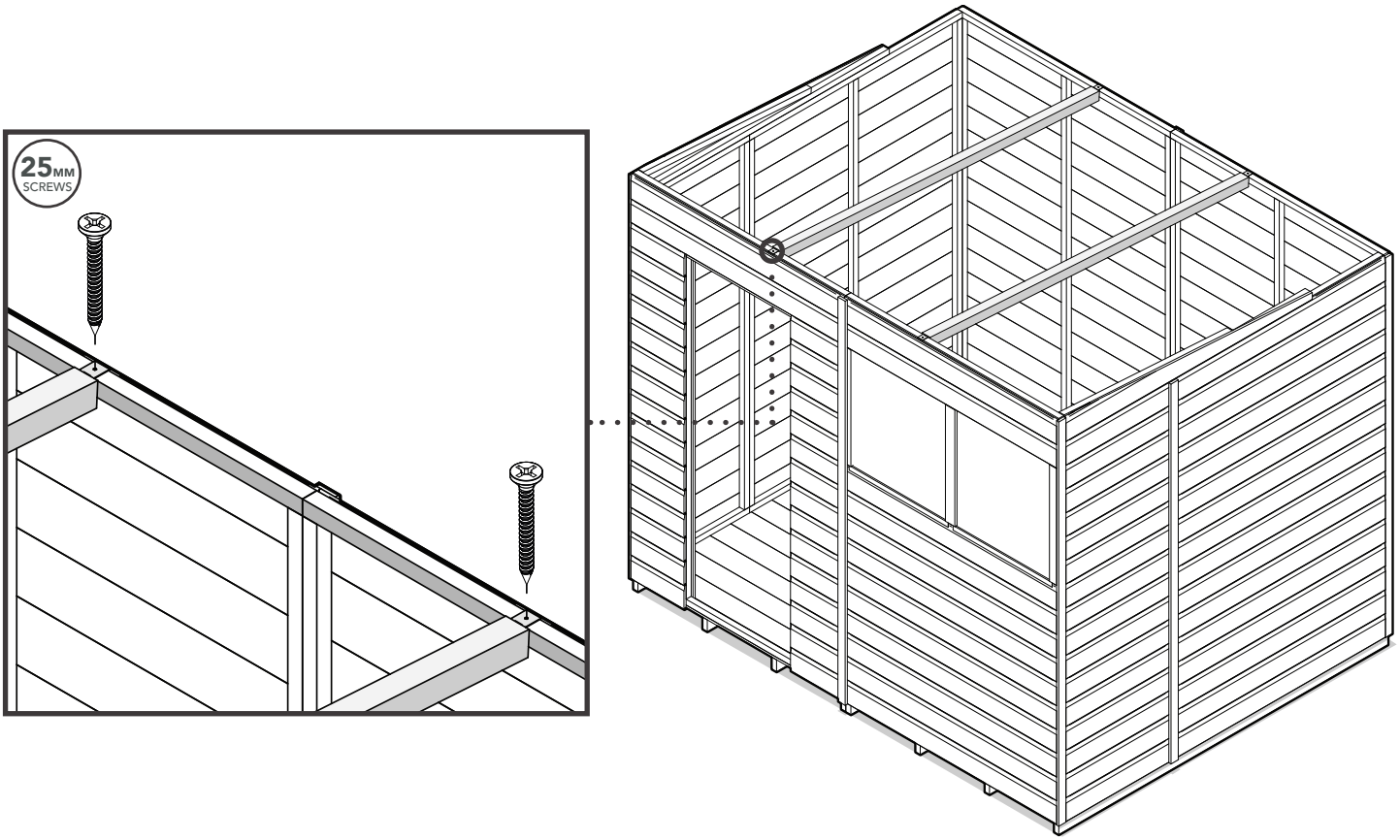

ROOF BEAM(S)

Position and secure the Z-brackets to the Side Panels and Infill Panels framework.
For the sheds with the **single Roof Beam, position your Roof Beam in the centre** of your shed as shown above.
For the sheds with **two Roof Beams, space your Roof Beams out evenly** in your shed as shown above.

OSB ROOF SHEET & FELT

FIXING PACK CONTAINS:

FIXING PACK CODE: *OSBSHEDROOFFP*

3.5 x **30mm** Screws
QTY: **60**

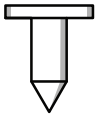

Felt **Tacks**
QTY: **145**

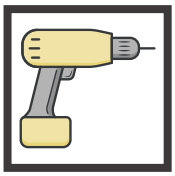

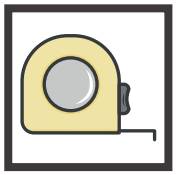

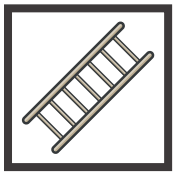

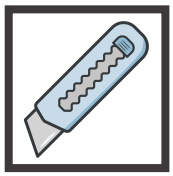

STEP 1: OSB ROOF SHEETS & ROOF STRIPS

6x4 PENT SHED

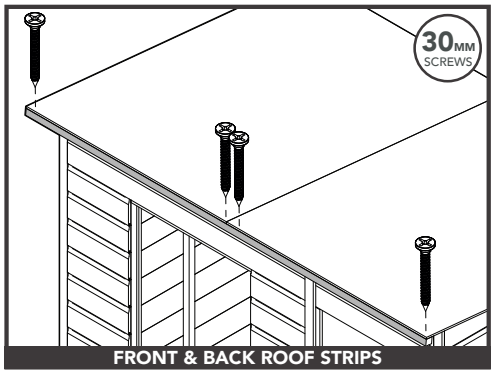

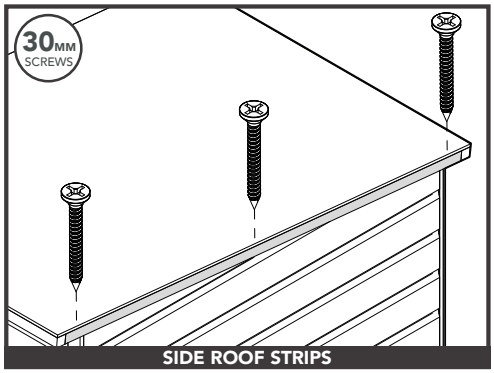

7x5 PENT SHED

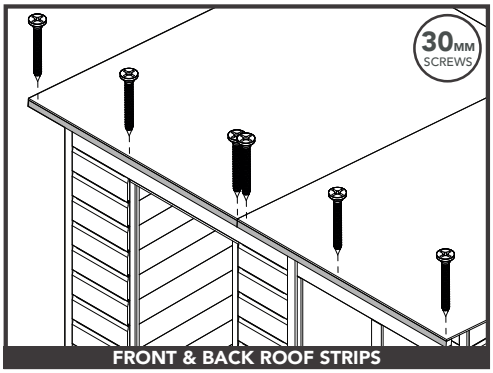

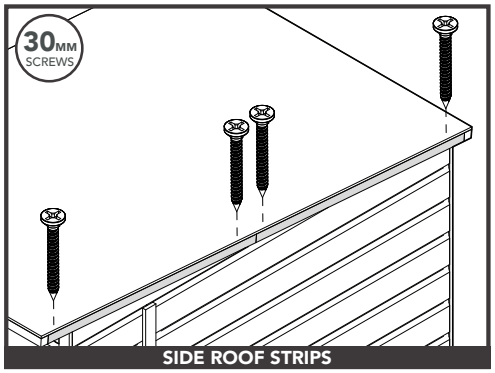

8x6/10x6 PENT SHED

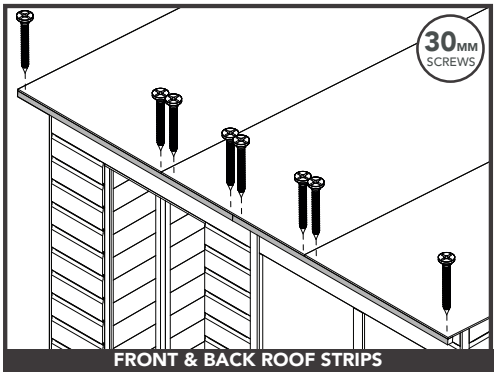

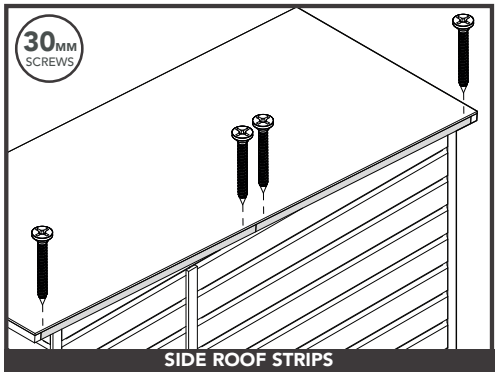

6x3 PENT SHED

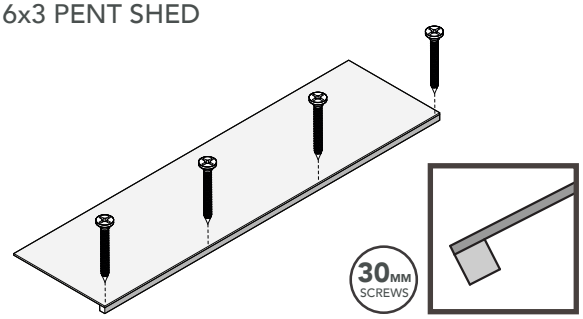

PENT ROOF STRIPS

Position your OSB Roof Sheets onto your shed. Position and secure your Front and Back Roof Strips to the OSB Roof Sheets. Ensure they are flush along the edge. **Position and secure your Side Roof Strips** to the OSB Roof Sheets as shown above. These will be in between your Front and Back Roof Strips. Take note of the different assembly options shown above. Add your Roof Strips before securing your OSB Roof Sheets.

STEP 2: SECURE ROOF SHEETS

SINGLE ROOF BEAM

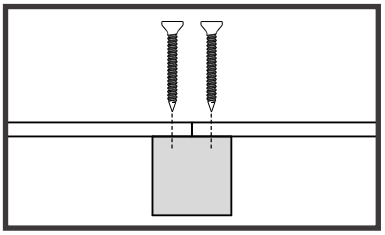

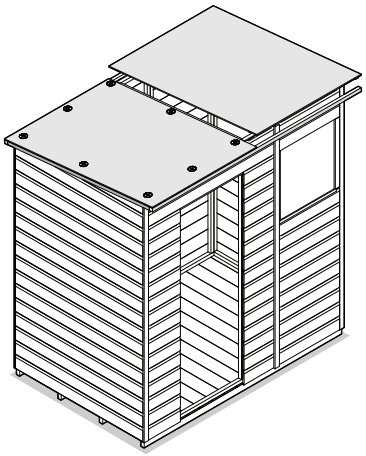

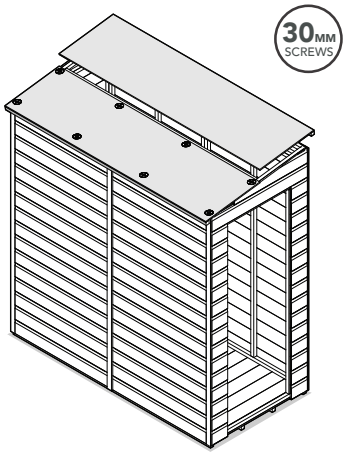

TWO ROOF BEAMS

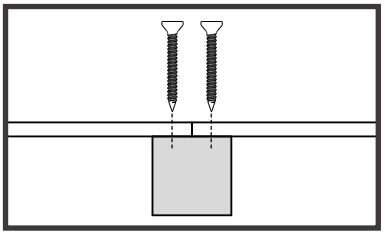

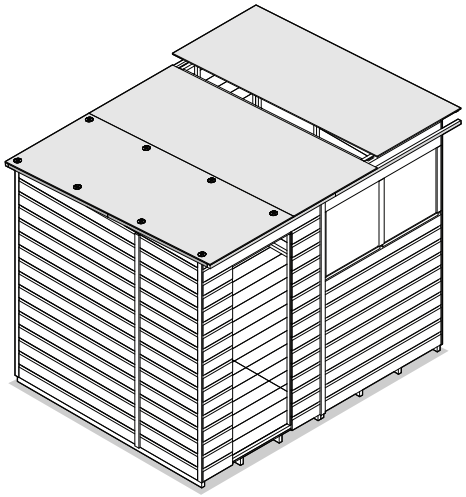

ROOF SHEETS

Position and secure the OSB Roof Sheets to the Pent Sections framework, Side Panels framework and the Roof Beams. Ensure each OSB Roof Sheet sits half way onto each Roof Beam. The overhang at the back should be approximately 45-50mm.

STEP 3: FELT

SINGLE ROOF BEAM

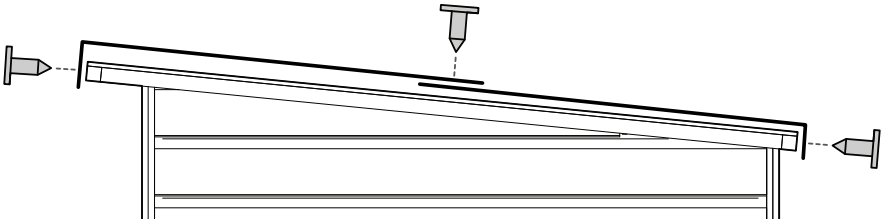

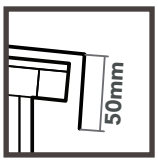

2 x FELT PIECES

Measure out 2 equal lengths, cut with a sharp knife, overlap them on top, around the edges and fold the corners; tack to keep secure. Ensure there is a 50mm overhang at the bottom and work from the bottom to the top. Hammer the tacks into the felt at 150mm intervals.

TWO ROOF BEAMS

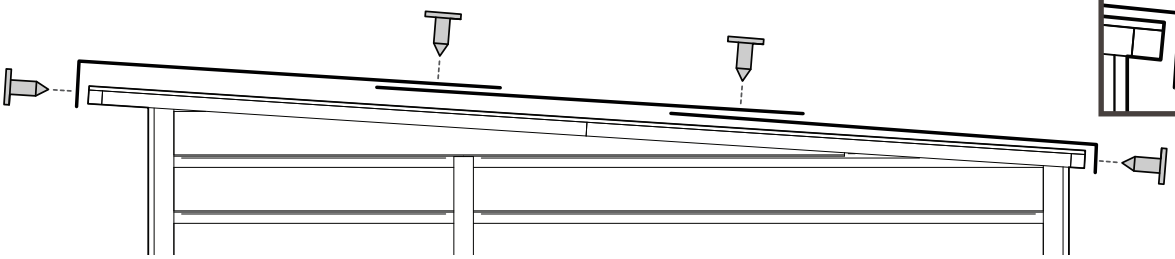

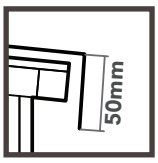

3 x FELT PIECES

Measure out 3 equal lengths, cut with a sharp knife, overlap them on top, around the edges and fold the corners; tack to keep secure. Ensure there is a 50mm overhang at the bottom and work from the bottom to the top. Hammer the tacks into the felt at 150mm intervals.

FASCIA'S & FINIALS

FIXING PACK CONTAINS:

FIXING PACK CODE: *SHEDFASCIASFP*

4 x **40mm** Screws
QTY: **16**

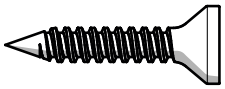

3.5 x **25mm** Screws
QTY: **4**

1.6 x **25mm** Pin
QTY: **2**

Beckwood **Badge**
QTY: **1**

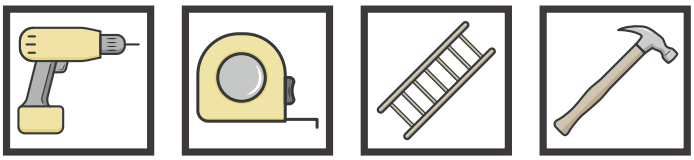

STEP 1: FASCIA ASSEMBLY

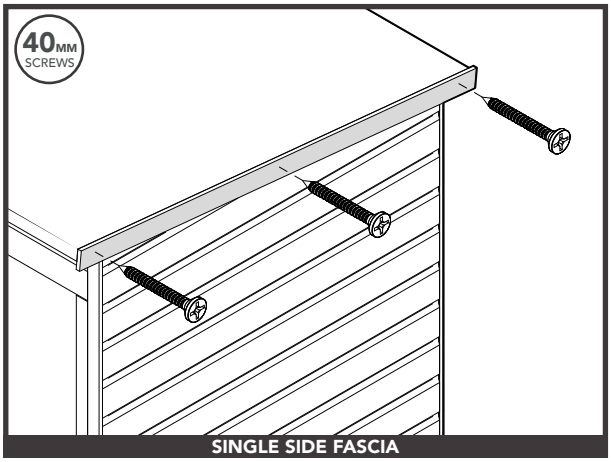

SINGLE SIDE FASCIA

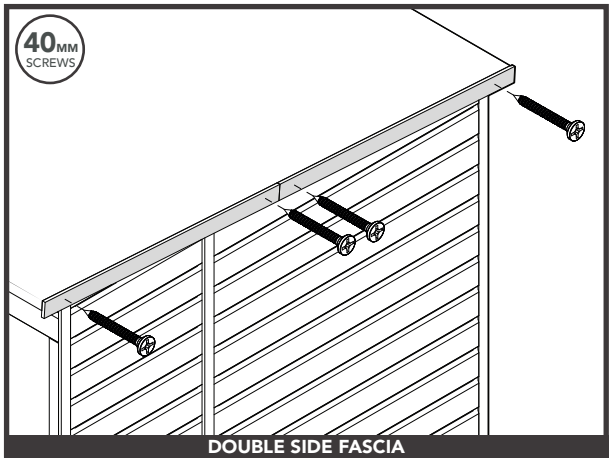

DOUBLE SIDE FASCIA

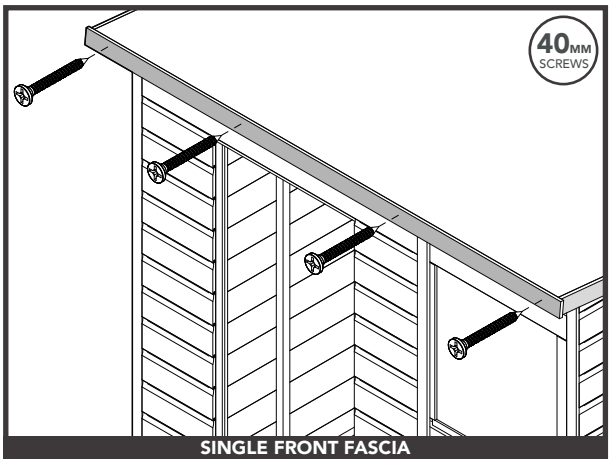

SINGLE FRONT FASCIA

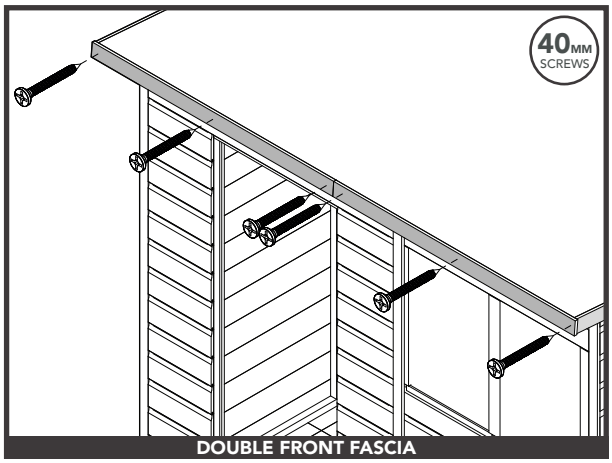

DOUBLE FRONT FASCIA

PENT FASCIA'S

Position and secure the Side Fascia/Side Fascia's to the Roof Strips behind**.** Ensure they are flush to the front of the roof.
Position and secure the Front Fascia/Front Fascia's to the Roof Strips behind as shown above.

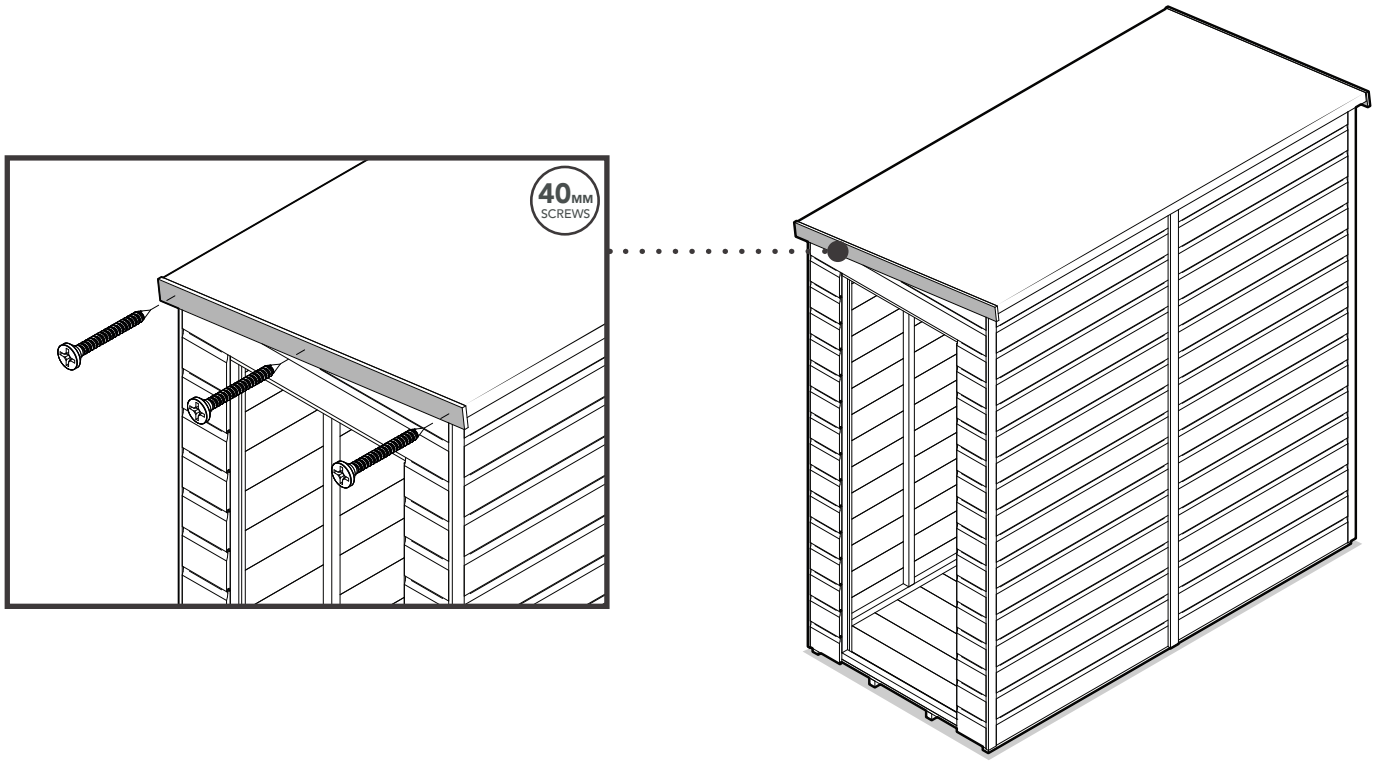

PENT FASCIA'S

Position and secure the Fascia's into the front and back Pent Sections framework and Roof Strips behind as shown above.

STEP 2: BADGE

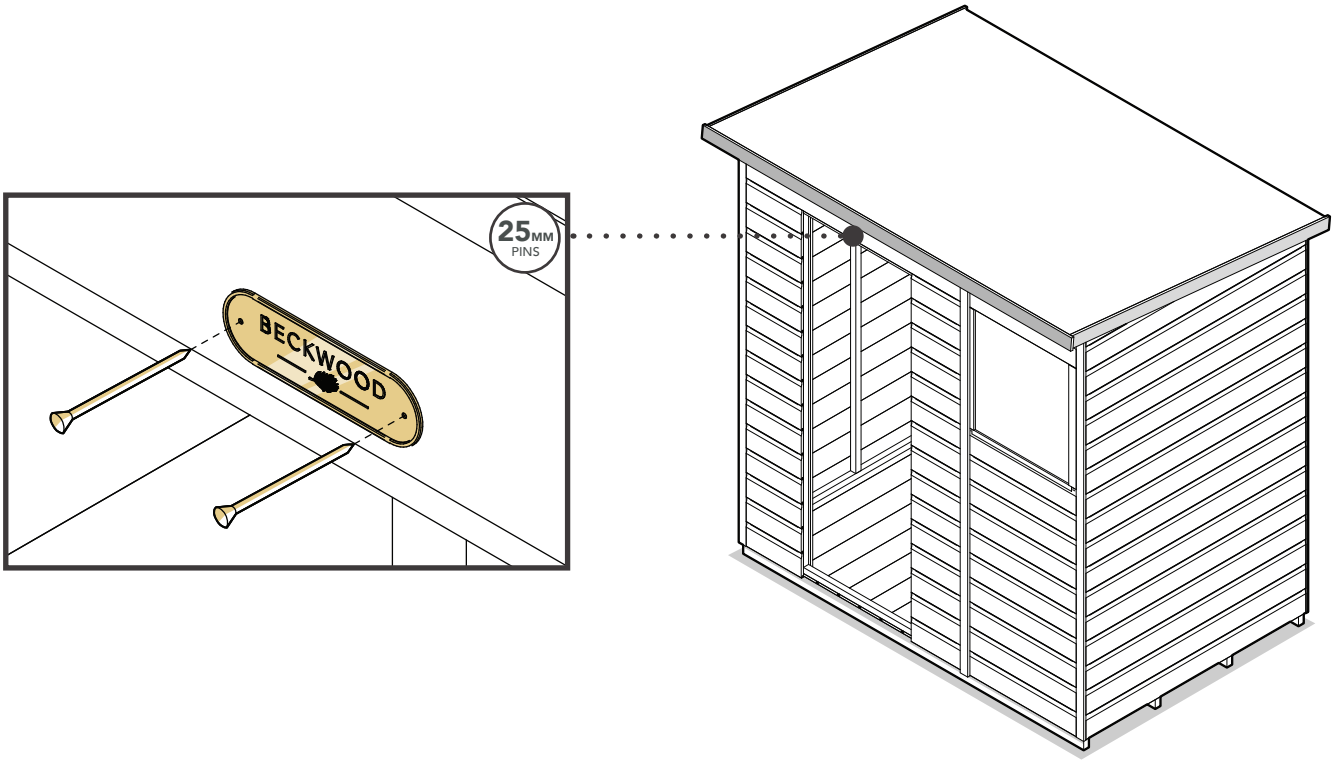

PIN YOUR BADGE

Position and secure your badge above the door opening, into the Door Panel framework behind with the pins provided.

SINGLE DOOR INSTALLATION

FIXING PACK CONTAINS:

FIXING PACK CODE: *SHEDSINGLEDOORFP*

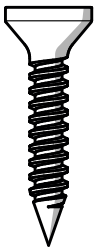

3.5 x **25mm** Screws
QTY: **14**

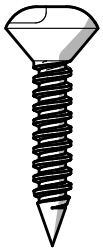

3.5 x **25mm** Security Screws QTY: **5**

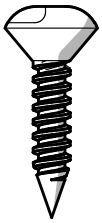

3.5 x **12mm** Security Screw QTY: **1**

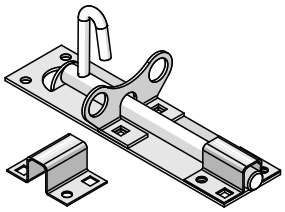

Padbolt (150mm)
QTY: **1**

Turn Buttons
QTY: **2**

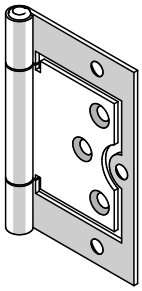

Flush **Hinges**
QTY: **2**

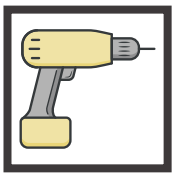

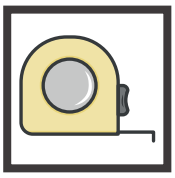

Please take care when installing the security screws.
Once the screws have been secured in place, you will be unable to unscrew them.

STEP 1: DOOR HINGES

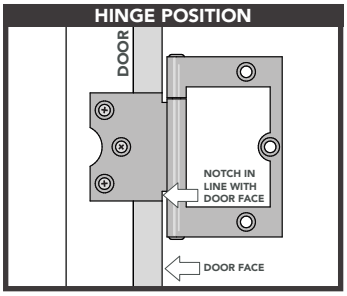

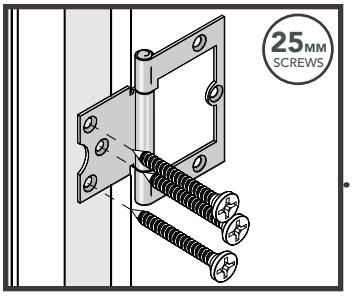

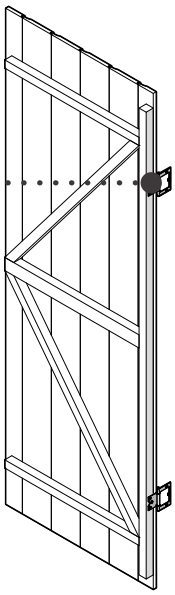

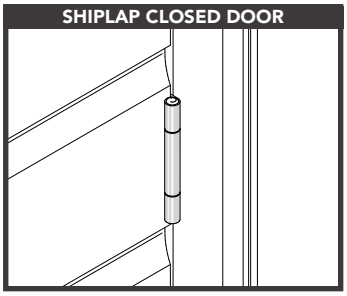

DOOR HINGES

Position and secure 2 x hinges to the Door framework. Please take note of the hinge position. The hinges pin should sit in the centre of the shiplap board as shown above.

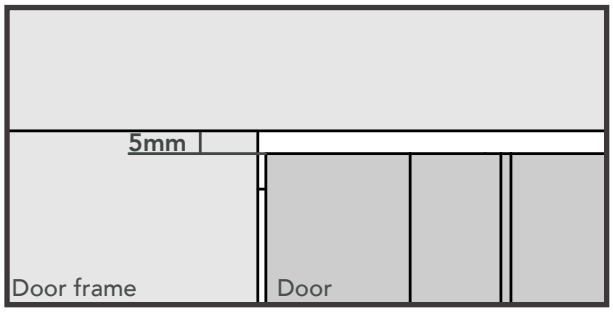

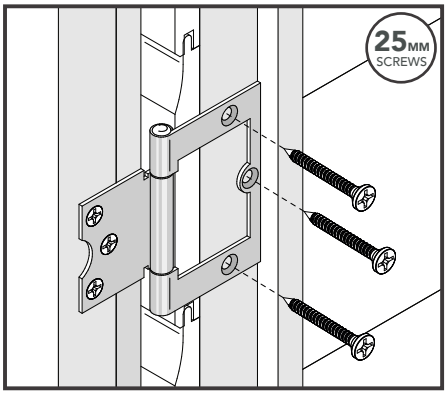

DOOR INSTALLATION

Position the Door into the door opening, ensuring it is level. Ensure the hinges are up against the framework and on the side, you secured the Door Weather Strip. **Secure the hinges in place.** Allow a 5mm gap at the top when positioning the Door.

STEP 2: DOOR FIXINGS

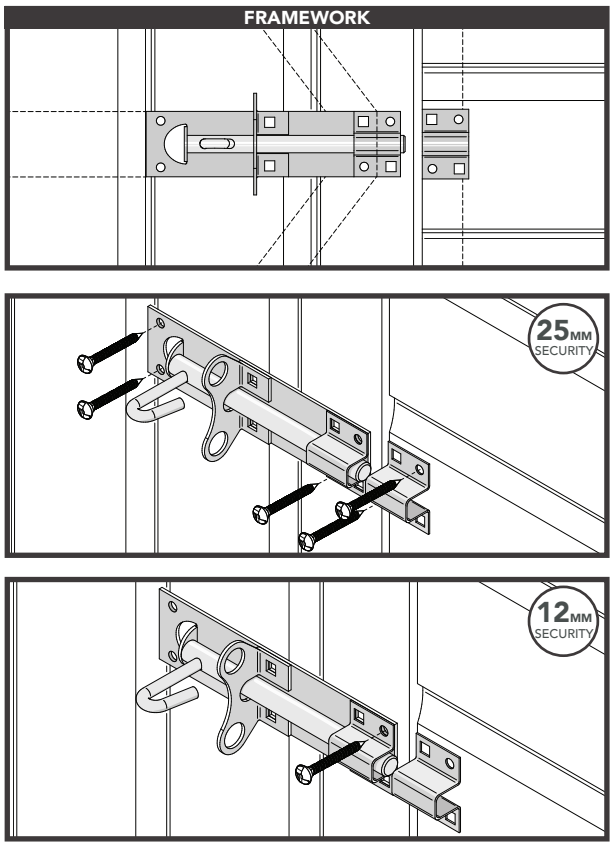

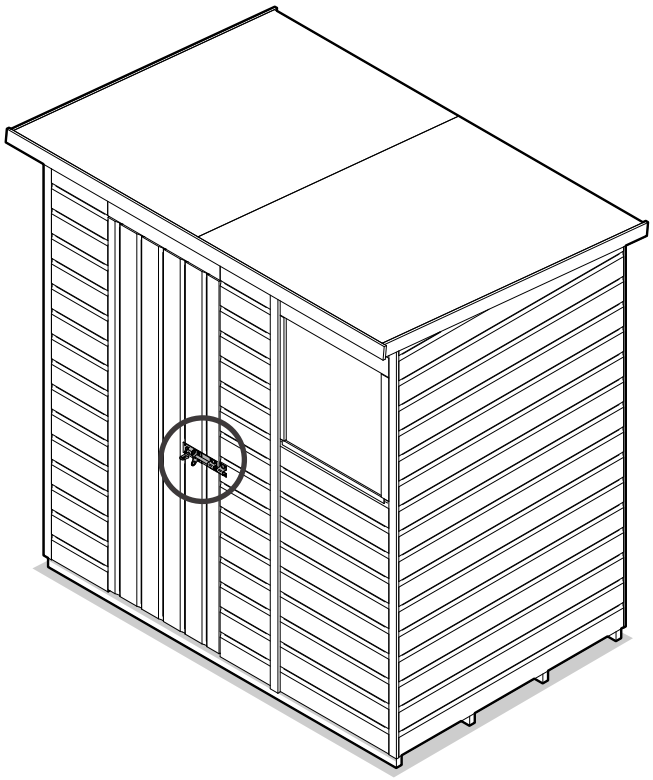

PADBOLT

Position and secure the Padbolt to the Doors framework. The front hole on the Padbolt will require the smaller security screw to be secured to the Door. **Secure the Receiver** to the Door Panels framework as shown above. **Use a flat head screwdriver to install the security screws.**

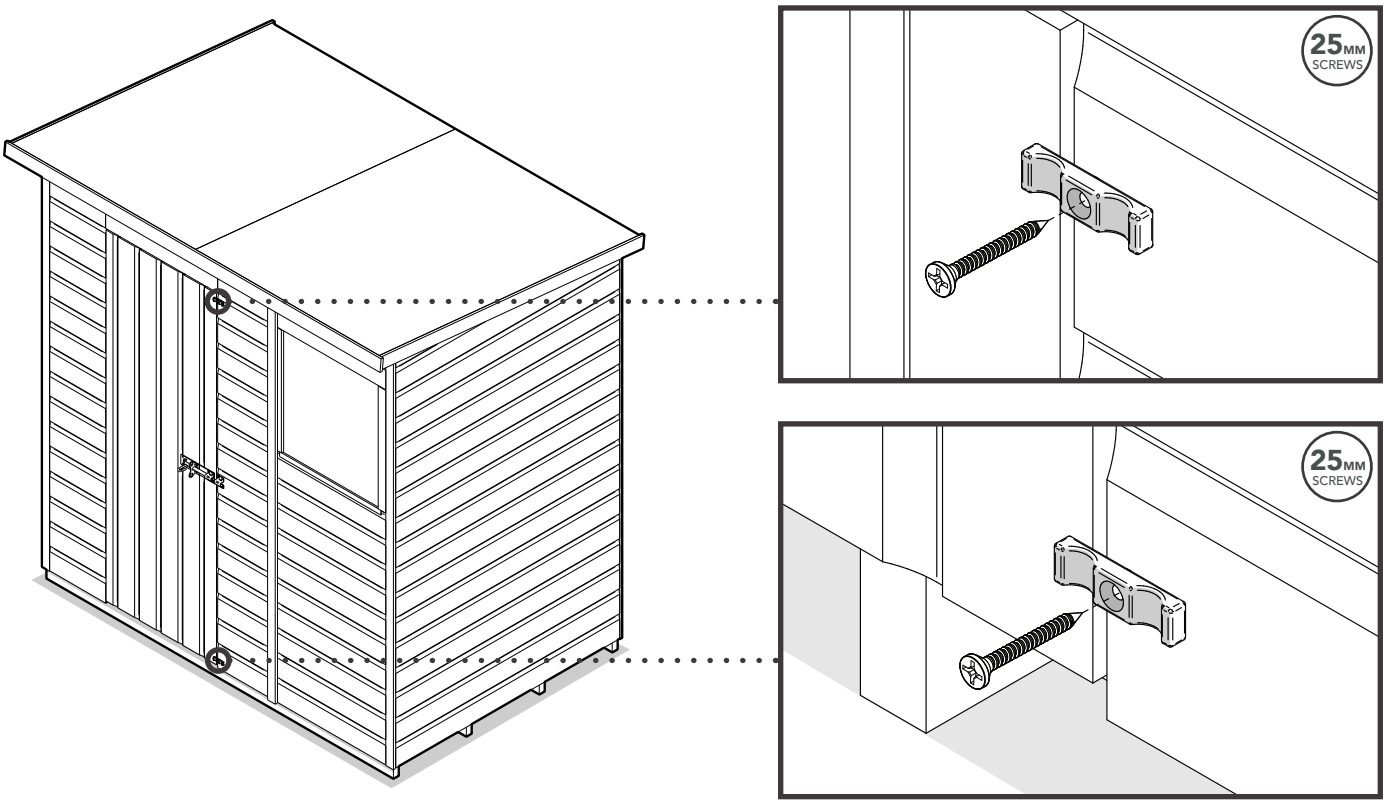

TURN BUTTONS

Position and secure a turn button to the top and bottom of the Door into the Door Panels framework as shown above.