8X10 TIMBERDALE APEX DOUBLE DOOR SHED WITH LEAN TO PARTS LIST (TGA810DD4W2OM) - 4 WINDOWS, 2 OPENING

FLOOR PLAN

Please take note of the corner position, as this indicates the panel orientation during construction. This will apply to all of the corners for your chosen shed.

Same size panels are interchangeable. Hinge your door onto either side.

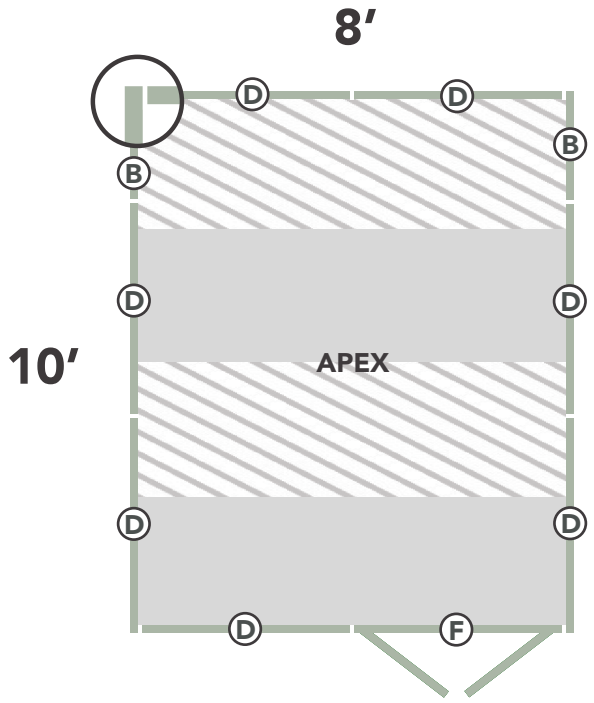

B 2ft Panel (590 x 1831mm)

D 4ft Panel (1180 x 1831mm)

F 4ft Door Panel (1180 x 1831mm)

CHECK YOU HAVE ALL YOUR PARTS PRIOR TO ASSEMBLY

The parts do not have codes on them. They are listed below should you need to order one.
The components provided may be heavy. Please lift with caution and with a minimum of 2 people.

8x10 T&G Pressure Treated Apex Double Door Shed - 4 Windows, 1 Opening With Lean To (TGA810DD4W2OLTM)			
Label	Part Code	Description	Qty
1	MWSTGFL258	Floor (737x2416mm)	4
2	TGM590PP	2ft Plain Panel (590x1831mm)	2
3	TGM1180PP	4ft Plain Panel (1180x1831mm)	5
4	TGM1180DDP	4ft Door Panel (1180x1831mm)	1
5	TGM1180WP	4ft Window Panel (1180x1831mm)	2
6	TGM1180WIN	Window (567x581mm)	4
7	TG121121180PT	4ft Top Board (121x12x1180mm)	2
8	28280548PT	Window Top Batten (28x28x548mm)	2
9	45280548PT	Window Sill (45x28x548mm)	4
10	P28120560PT	Window Cover Strips (28x12x560mm)	6
11	TGAMPEA8	Apex Section (2430x463mm)	2
12	28161088PT	Door Strip (28x16x1088mm)	1
13	38121710PPT	Door Weather Strip (38x12x1710mm)	2
14	P40121823PT	Cover Strip (40x12x1823mm)	10
15	45451280PAII69PT	Angled Roof Beams (45x45x1280mm)	4
16	121120879PAII21PT	Truss Board (121x12x879mm)	4
17	45450155PAI69PT	Truss Block (45x45x155mm)	4
18	TGAM6RF1180	Roof Section (1075x1180mm)	4
19	TGAM6RF590	Roof Section (1075x590mm)	2
20	TGAMRFINF1180	4ft Infill Roof Section (316x1180mm)	4
21	TGAMRFINF590	2ft Infill Roof Section (316x590mm)	2
22	45281375PPT	Apex Batten (45x28x1375mm)	4
23	75751500AI69PT	Up Right Post (75x75x1500mm)	4
24	47050075BR	Post Support	4
25	TGAMLS909PP	3ft Log Store Plain Panel (909x1292mm)	2
26	TGAMLS590RF	2ft Log Store Roof Section (590x1010mm)	3
27	TGAMLS1260RF	4ft Log Store Roof Section (1260x1010mm)	1
28	P59121020PT	Fascia (59x12x1020mm)	2
29	P59121376PT	Fascia's (59x12x1376mm)	4
30	FIN12712112PT	Finial (127x121x12mm)	2
31	45251640PPT	Slamming Strip (45x25x1640mm)	1
32	TGMSDDR	Double Door (537x1692mm)	2
Felt - Please contact our aftersales team with your product code if you are missing your felt.			

Use the labelled components on the next page to help identify the part code and description.

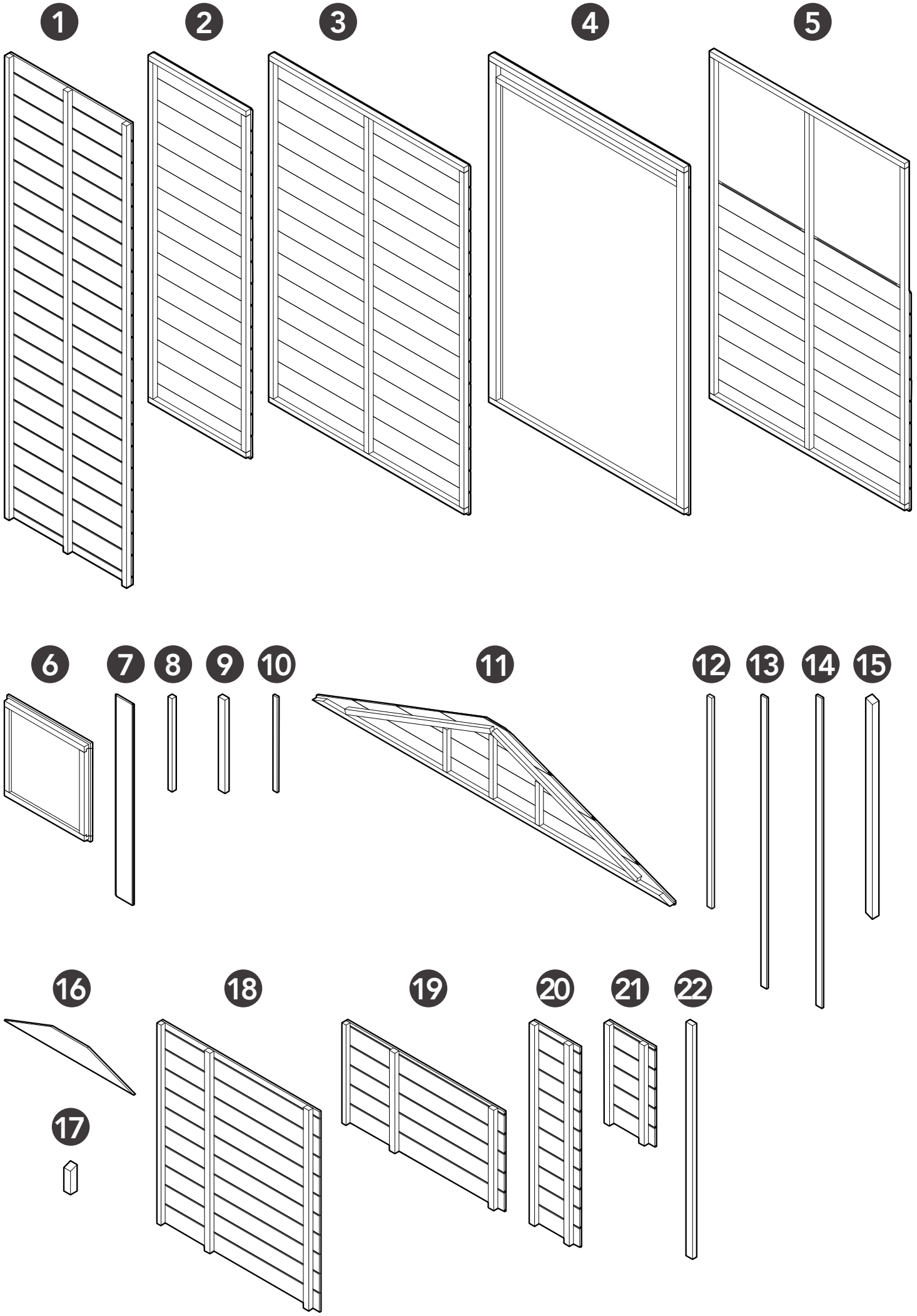
1
2
3
4
5
6
7
8
9
10
11
12
13
14
15
16
17
18
19
20
21
22

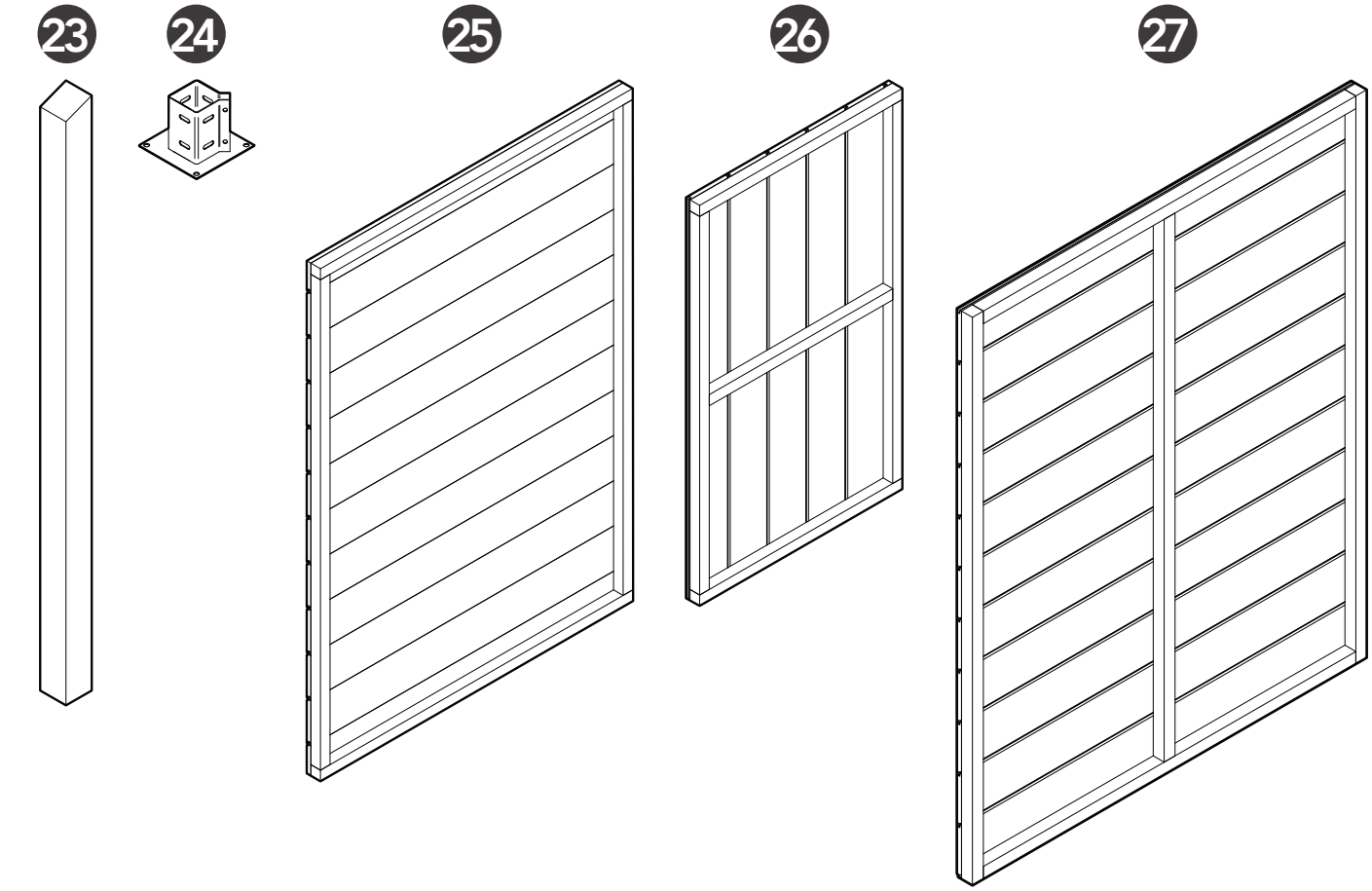
23
24
25
26
27

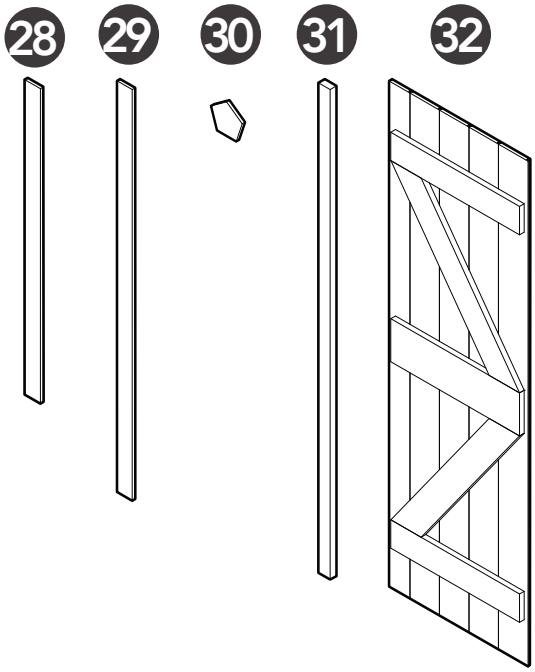
28
29
30
31
32