8X12 TIMBERDALE APEX DOUBLE DOOR SHED PARTS LIST (TGA812DD6W2OM) - 6 WINDOWS, 2 OPENING

FLOOR PLAN

Please take note of the corner position, as this indicates the panel orientation during construction. This will apply to all of the corners for your chosen shed.

Same size panels are interchangeable. Hinge your door onto either side.

D 4ft Panel (1180 x 1831mm)

F 4ft Door Panel (1180 x 1831mm)

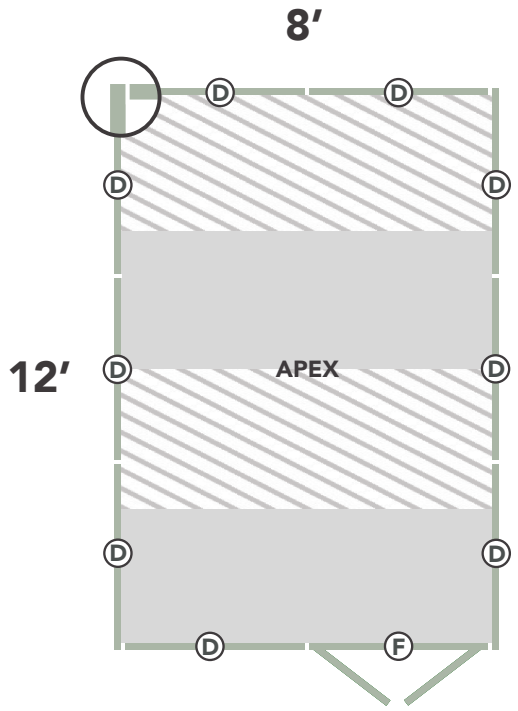

CHECK YOU HAVE ALL YOUR PARTS PRIOR TO ASSEMBLY

The parts do not have codes on them. They are listed below should you need to order one.
The components provided may be heavy. Please lift with caution and with a minimum of 2 people.

8x12 T&G Pressure Treated Apex Double Door Shed - 6 Windows, 1 Opening (TGA812DD6W2OM)			
Label	*Part Code*	Description	Qty
1	*MWSTGFL38*	Floor (885x2416mm)	4
2	*TGM1180PP*	4ft Plain Panel (1180x1831mm)	6
3	*TGM1180WP*	4ft Window Panel (1180x1831mm)	3
4	*TGM1180DDP*	4ft Door Panel (1180x1831mm)	1
5	*TGM1180WIN*	Window (567x581mm)	6
6	*TG121121180PT*	4ft Top Board (121x12x1180mm)	3
7	*28280548PT*	Window Top Batten (28x28x548mm)	2
8	*45280548PT*	Window Sill (45x28x548mm)	6
9	*P28120560PT*	Window Cover Strips (28x12x560mm)	9
10	*TGAMPEA8*	Apex Section (2430x463mm)	2
11	*28161088PT*	Door Strip (28x16x1088mm)	1
12	*38121710PPT*	Door Weather Strip (38x12x1710mm)	2
13	*P40121823PT*	Cover Strip (40x12x1823mm)	10
14	*45451280PAII69PT*	Angled Roof Beams (45x45x1280mm)	4
15	*121120879PAII21PT*	Truss Board (121x12x879mm)	4
16	*45450155PAI69PT*	Truss Block (45x45x155mm)	4
17	*TGAM6RF1180*	Roof Section (1075x1180mm)	6
18	*TGAMRFINF1180*	4ft Roof Section (316x1180mm)	6
19	*45281375PPT*	Apex Batten (45x28x1375mm)	4
20	*P59121376PT*	Fascia's (59x12x1376mm)	4
21	*FIN12712112PT*	Finial (127x121x12mm)	2
22	*45251640PPT*	Slamming Strip (45x25x1640mm)	1
23	*TGMSDDR*	Double Door (537x1692mm)	2
Felt - Please contact our aftersales team with your product code if you are missing your felt.			

Use the labelled components on the next page to help identify the part code and description.

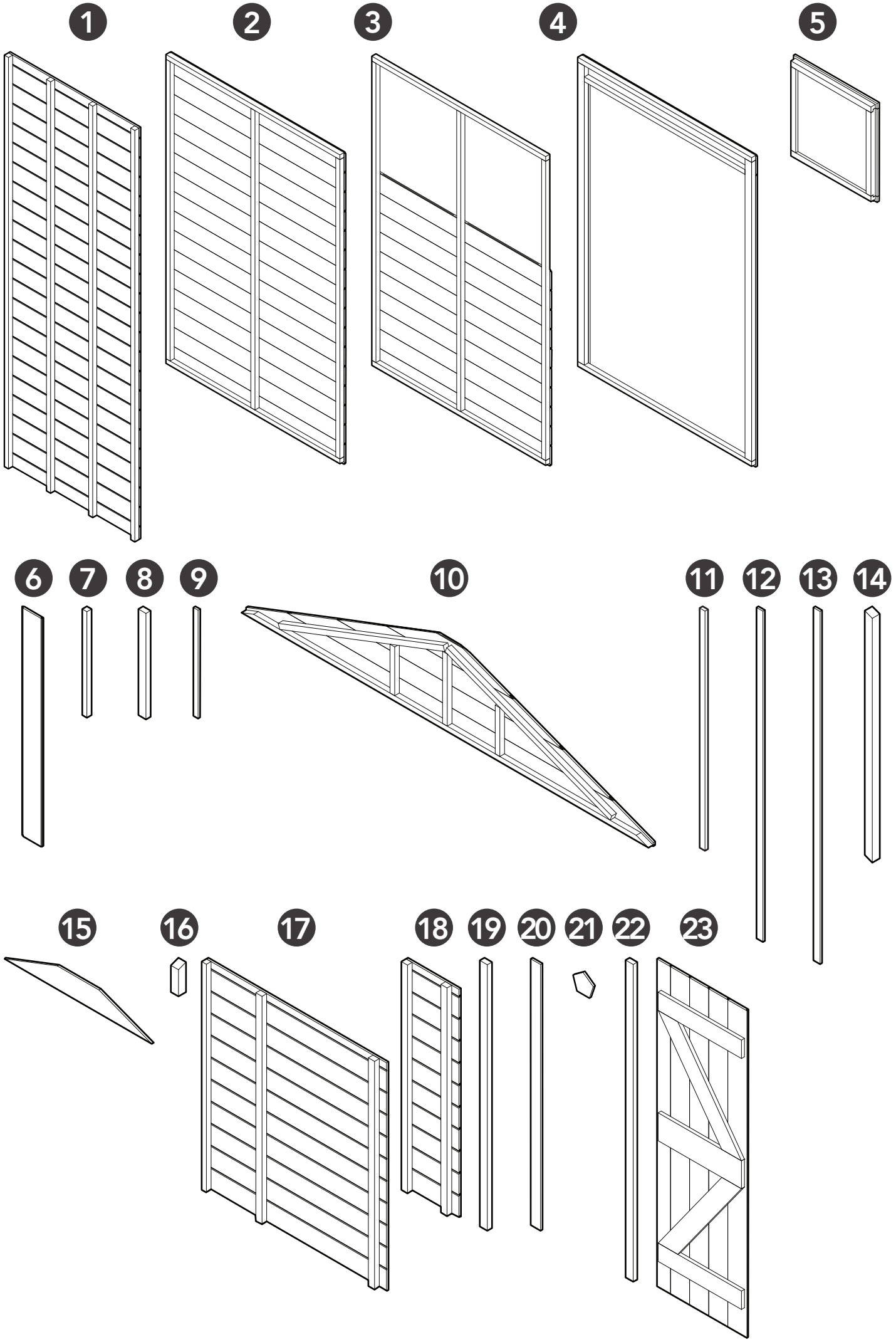
1
2
3
4
5
6
7
8
9
10
11
12
13
14
15
16
17
18
19
20
21
22
23