10X10 TIMBERDALE REVERSE APEX DOUBLE DOOR SHED PARTS LIST (TGR1010DD4W1OM) - 4 WINDOWS 1 OPENING

FLOOR PLAN

Please take note of the corner position, as this indicates the panel orientation during construction. This will apply to all of the corners for your chosen shed.

Same size panels are interchangeable. Hinge your door onto either side.

- C – 3ft Panel (885 x 1831mm)
- D – 4ft Panel (1180 x 1831mm)
- F – 4ft Door Panel (1180 x 1831mm)

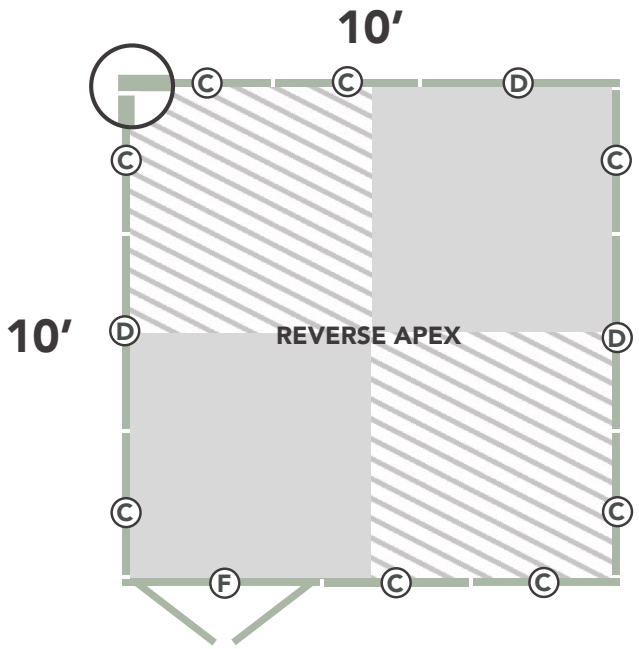

CHECK YOU HAVE ALL YOUR PARTS PRIOR TO ASSEMBLY

The parts do not have codes on them. They are listed below should you need to order one.
The components provided may be heavy. Please lift with caution and with a minimum of 2 people.

10x10 T&G Pressure Treated Reverse Apex Double Door Shed - 4 Windows, 1 Opening (TGR1010DD4W1OM)			
Label	*Part Code*	Description	Qty
1	*MWSTGFL55*	Floor (1503x1475mm)	4
2	*TGM885PP*	3ft Plain Panel (885x1831mm)	6
3	*TGM1180PP*	4ft Plain Panel (1180x1831mm)	3
4	*TGM885WP*	3ft Window Panel (885x1831mm)	2
5	*TGM1180DDP*	4ft Door Panel (1180x1831mm)	1
6	*TGM885WIN*	Window (419x581mm)	4
7	*TG121120885PT*	3ft Top Board (121x12x885mm)	2
8	*28280400PT*	Window Top Batten (28x28x400mm)	1
9	*45280400PT*	Window Sill (45x28x400mm)	4
10	*P28120560PT*	Window Cover Strips (28x12x560mm)	6
11	*TGAMPEA5LH*	Left Hand Apex Section (1510x577mm)	2
12	*TGAMPEA5RH*	Right Hand Apex Section (1510x577mm)	2
13	*28161088PT*	Door Strip (28x16x1088mm)	1
14	*38121710PPT*	Door Weather Strip (38x12x1710mm)	2
15	*P40120545PT*	Cover Strip (40x12x545mm)	2
16	*P40121823PT*	Cover Strip (40x12x1823mm)	12
17	*45451596PAII69PT*	Angled Roof Beams (45x45x1596mm)	4
18	*121120879PAII21PT*	Truss Board (121x12x879mm)	4
19	*45450155PAI69PT*	Truss Block (45x45x155mm)	4
20	*45281690PPT*	Apex Batten (45x28x1690mm)	4
21	*TGAM6RF1180*	Roof Section (1075x1180mm)	2
22	*TGAM6RF885*	Roof Section (1075x885mm)	4
23	*TGAMRFINF1180*	4ft Infill Roof Section (316x1180mm)	4
24	*TGAMRFINF885*	3ft Infill Roof Section (316x885mm)	8
25	*P59121695PT*	Fascia's (59x12x1695mm)	4
26	*FIN12712112PT*	Finial (127x121x12mm)	2
27	*45251640PPT*	Slamming Strip (45x25x1640mm)	1
28	*TGMSDDR*	Double Door (537x1692mm)	2
Felt - Please contact our aftersales team with your product code if you are missing your felt.			

Use the labelled components on the next page to help identify the part code and description.

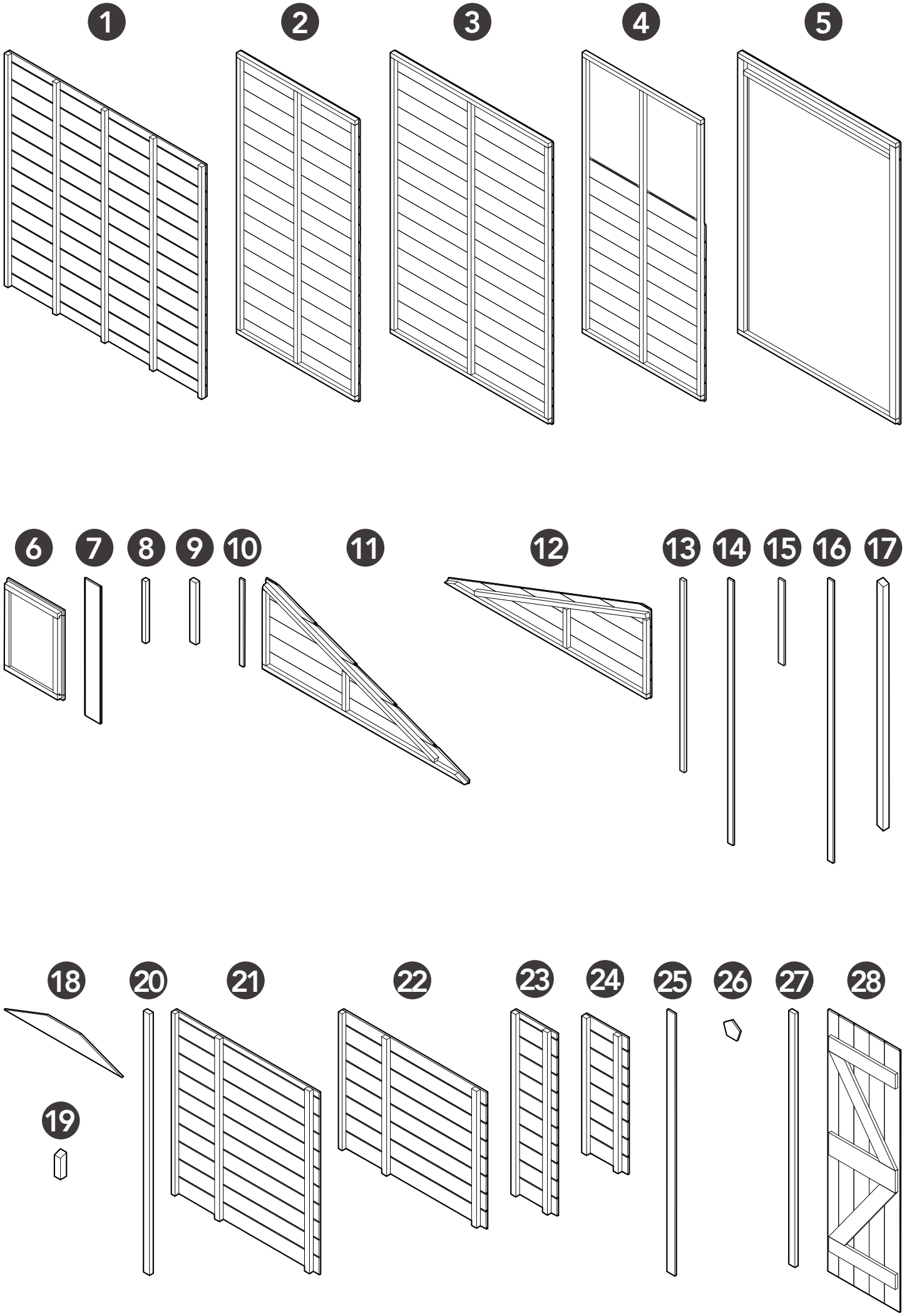
1
2
3
4
5
6
7
8
9
10
11
12
13
14
15
16
17
18
19
20
21
22
23
24
25
26
27
28